

GHX GLX

Generator Sets

Owner's Manual

380502.01

Owner's Manual

Diesel Generator Sets

50 Hz	60 Hz
GHX8	
GHX14	GHX17
GHX24	
GLX6	GLX7
GLX14	GLX17
GLX20	GLX24

Serial numbers

Engine serial number: .....

Generator serial number: .....

Please enter the serial numbers here.
These numbers should be quoted when inquiring about Customer Service, Repairs or Spare Parts (see page 12).

We reserve the right to make any changes without previous notice.

Copyright © 2026 VETUS B.V. Schiedam Holland

380502.01

Please read and observe the information given in this operation manual. This will enable you to avoid accidents, preserve the manufacturer's warranty and maintain the engine in peak operating condition.

Make sure that the manual will remain intact and damage is prevented. Keep the manual away from humidity and heat.
Do not alter the content of the manual.

The manual is an integral part of the generator set. Hand over the manual tot the new owner if boat or generator set is being sold.

For the Guarantee Conditions, see the VETUS Diesel 'Service and Warranty Manual'.

This generator set has been built exclusively for the application specified in the scope of supply and is to be used only for the intended purpose. Any use exceeding that scope is considered to be contrary to the intended purpose. The manufacturer will not not assume responsibility for any damage resulting therefrom. The risks involved are to be borne by the user.

Use in accordance with the intended purpose also implies compliance with the conditions laid down by the manufacturer for operation, maintenance and servicing. The generator set should only be operated, maintained and serviced by persons which are familiar with the former and the hazards involved.

The relevant accident prevention guidelines and other generally accepted safety and industrial hygiene regulations must be observed.

Unauthorized generator set modifications will invalidate any liability claims against the manufacturer for resultant damage.

Manipulations of the injection and regulating system may also influence the performance of the engine, and its emissions. Adherence to legislation on pollution cannot be guaranteed under such conditions.

Content

1 Safety measures 4
- Warning indications 4
- Preventing fire and explosion 5
- Prevention of injury 6
- When problems occur 8

2 Introduction 9

3 Description of the generator set 10
- Connection and control panel 10
- Remote control panel 12
- Identification of the generator set 12

4 Operation 13
- General guidelines 13
- Initial Operation, Running-in 14
- Starting 15
- Running 16
- Stopping 18

5 Maintenance 19
- Introduction 19
- Maintenance schedule 20
- Check engine Speed/Adjust Fuel Pump 22
- Generator 26

6 Winter Lay-up 27
- Preparation for Winter 27
- Preparation for Summer 27

7 Fault Finding, generator / control panel 28
- General 28
- Fault Finding Table 29
- Fault Icons 31

8 Technical data 32
- Winding resistances 36

9 Operating Media 37

10 Wiring diagrams 38

11 Overall dimensions 48

Warning indications
The following warning indications are used in this manual in the context of safety:

DANGER

Indicates that great potential danger exists that can lead to serious injury or death.

WARNING

Indicates that a potential danger that can lead to injury exists.

CAUTION

Indicates that the usage procedures, actions etc. concerned can result in serious damage to or destruction of the engine. Some CAUTION indications also advise that a potential danger exists that can lead to serious injury or death.

NOTE

Emphasises important procedures, circumstances etc.

Symbols

✓ Indicates that the relevant procedure must be carried out.

✗ Indicates that a particular action is forbidden.

Pass the safety precautions on to other people who will use the engine.

General rules and laws concerning safety and accident prevention must always be observed.

WARNING

This product should only be operated by persons who have read and understood the instructions and precautions in this manual. Failure to follow the instructions in this manual may result in serious injury or property damage. The manufacturer shall not be liable for any damages resulting from improper operation.



Fire risk!

- Do not smoke if refuelling.
- Avoid spilling fuel on hot surfaces. Spilled fuel must be cleaned up immediately.
- Do not use petrol or diesel to clean components but make use of good quality, non-inflammable, non-poisonous solvents that are available from dealers.
- Always be alert to possible fuel or oil leakage!
  If you discover a leak, take counter-measures immediately. If fuel or oil is spilled on a hot engine, fire can break out. This can cause physical injury or damage to the equipment.
- Do not fill the fuel tank while the engine is running!
  Only refuel with the engine stopped.
- Never put flammable materials in the vicinity of the engine!
- Keep the engine and engine compartment clean!
  Remove all inflammable materials such as fuel, oil and other litter before it builds up in the vicinity of the engine.
- Connecting (emergency) extra starting battery
  Proceed as follows when an extra starting battery is used to jump start the engine:

- First connect the positive lead
- Lastly connect the earth cable (negative pole) to the engine block

  If this cable is connected in error to the negative pole of the engine battery, a spark can occur. The result of this could be that explosive gas produced by the battery explodes.

- Once the engine is started, first remove the earth cable.

- The moving parts of the engine are dangerous. Never touch moving parts of the engine while it is running, to prevent cuts and other injuries.
- Stop the engine before carrying out maintenance!
- Always stop the engine before topping up or replacing fuel, oil or coolant.
- Before carrying out inspection or maintenance the main battery switch turned off.
- Satisfy yourself that everything is in order before the engine is started again!
  Make sure that no-one is working on or close to the engine before you start it. Remove all foreign objects from around the engine, such as litter, oil, tools and other components that are not part of the engine.
- Install all protective covers!
  To prevent injury, make sure that all protective covers and cover plates are replaced over moving parts.
- Remove any tool used to turn the engine over. If you leave this in position, serious injury or damage to the equipment can result.
- NEVER open the cap of the expansion tank when the engine is at working temperature.
- Only check the coolant level after the engine has been stopped and the filler cap on the heat exchanger is cool enough to be removed with bare hands.
- Never attempt to adjust the fan belt on a running engine.

- Be careful with battery acid!
  If battery acid comes in contact with the eyes or skin, rinse the affected part immediately with copious amounts of water. If battery acid comes in contact with the eyes, rinse them out immediately with plenty of water and consult a doctor.

- Be careful with antifreeze!
  If you accidentally swallow antifreeze, make yourself vomit and consult a doctor immediately. If antifreeze comes in contact with your eyes, wash them out immediately with plenty of water and consult a doctor.

- Make sure that you are wearing suitable clothing before starting work!
  For your own safety you will most likely need special equipment – safety helmet, eye protection, safety boots, safety goggles, heavy gloves, ear protectors etc. Use them when necessary.

- Carry out maintenance procedures safely by only using suitable tools.

- Exhaust gases
  Do not start the engine if the exhaust system is not connected.

When the engine stops suddenly:
If the engine stops suddenly, do not start it again immediately. Track down the cause and carry out the necessary repairs before you start the engine again. If you do not do this, serious engine problems can develop.

If the oil pressure is too low:
Stop the engine immediately and check the lubrication system. Running an engine with low oil pressure can cause bearing and other parts to seize.

If the engine overheats:
If the engine should overheat, do not switch it off immediately. If an overheated engine is stopped suddenly, this can cause the coolant temperature to rise rapidly and moving parts to seize.
Switch off the main switch and let the generator set run for a short period of time to allow the hot parts of the engine to cool down, stop the engine and allow it to cool completely, and then gradually top up the coolant.
Remember: adding coolant to an overheated engine can cause damage to the cylinder head.

If the fan belt is broken:
Immediately stop the engine. If an engine is used with a broken fan belt, this can lead to the engine overheating, which in turn can cause coolant to spray out of the expansion tank.

If the engine behaves strangely:
Stop the engine.
Do not use the engine again until the cause of the defect has been solved.

2 Introduction

Dear customer,

VETUS generator sets are designed for marine application. Consequently, a wide range of variants are offered to meet the requirements of specific cases.

Your generator set is appropriately equipped for your vessel, which means that not necessarily all components described in this manual are mounted to your engine.

We have endeavoured to highlight any differences so that you will able to locate the operating and maintenance instructions relevant to your engine quickly and easily.

Please read this manual before starting your generator set and always observe the operating and maintenance instructions.

We are available to help with any additional inquiries.

VETUS B.V.

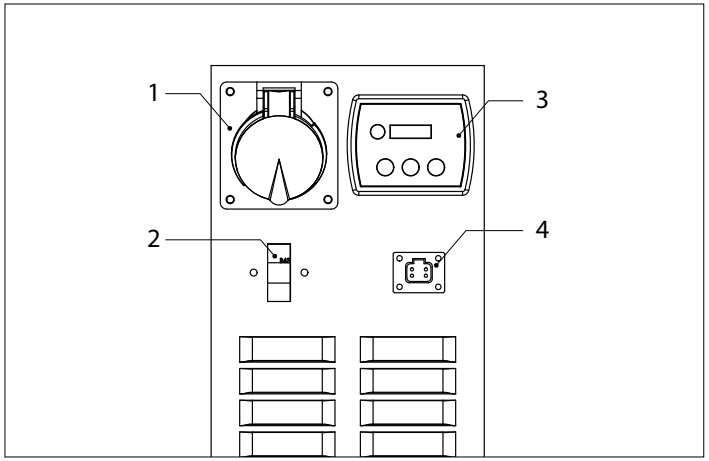

1 Connection panel for single phase generator set

1 Power socket
2 Circuitbreaker
3 Control/operation panel
4 Connection for remote control panel

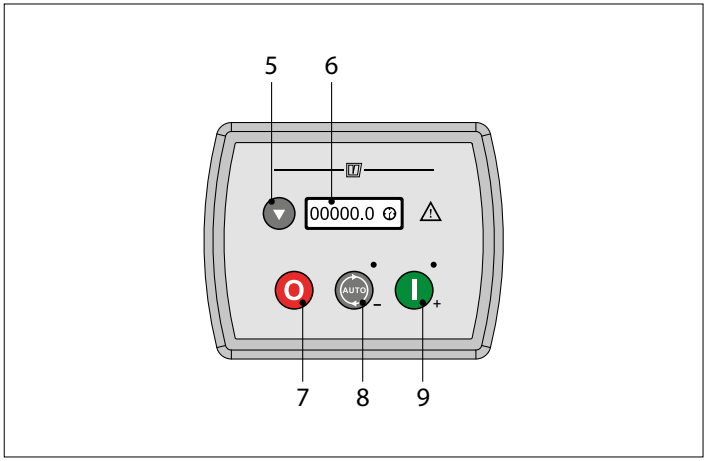

2 Control panel for single phase generator set

5 Navigation buttons menu
6 Display
7 Stop / Reset Mode
8 Auto Mode
9 Manual starting

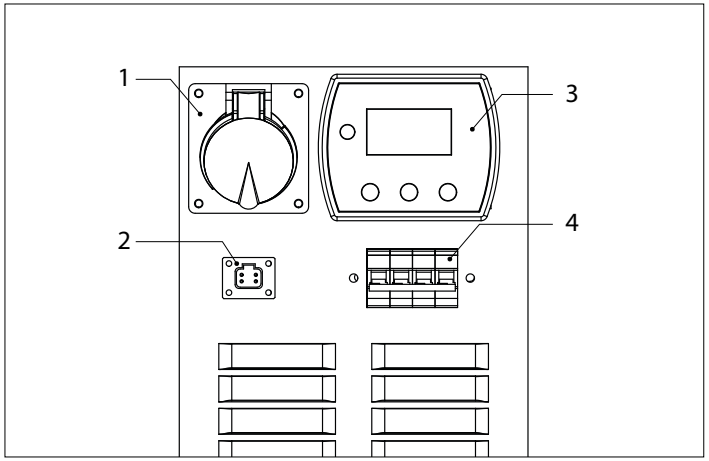

3 Connection panel for three phase generator set

1 Power socket
2 Connection for remote control panel
3 Control/operation panel
4 Circuitbreaker

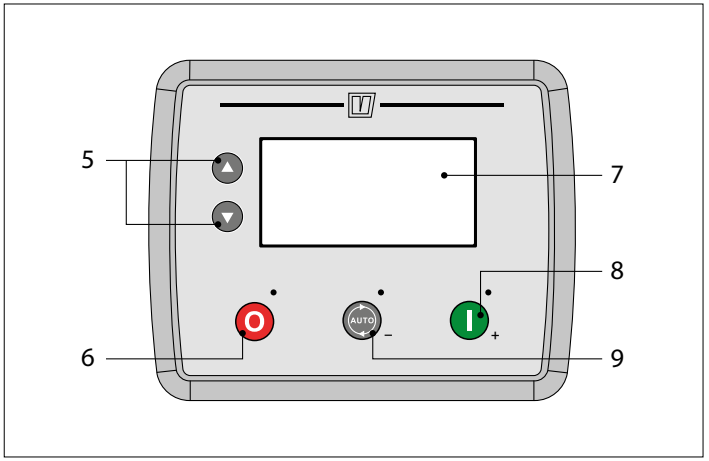

4 Control panel for three phase generator set

5 Navigation buttons menu
6 Stop / Reset Mode
7 Display
8 Manual starting
9 Auto Mode

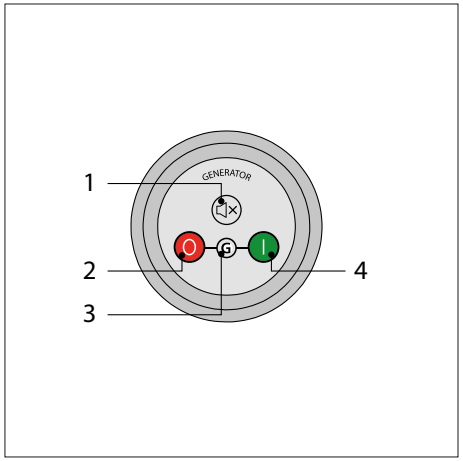

5 Remote control panel

1 Alarm accept
2 Stop
3 Indication 'Generator in operation'
4 Start



6 Engine data tag

The VETUS engine serial number and performance data are printed on the engine data tag.

Model and engine serial number must be given when ordering spare parts.

See the 'Overall Dimensions' drawing for the identification of the most important generator set connections.

To identify specific engine components, consult the separate engine manual.

Which type of generator set suits which type of engine is described in 'Technical Data'.
This also provides a summary of the manuals for the various engines.

4 Operation

General Guidelines for Use

Following the recommendations below will result in a longer operating life, better performance and more economical operation of your generator set.

- Carry out the maintenance described regularly, including the 'Daily Procedure before Starting'.
- Use anti-freeze or coolant fluid in the engine cooling system throughout the year to protect against frost damage and prevent corrosion. See the engine manual for the correct specification.
- Never allow the engine to run without thermostat.
- Always use a good quality lubricating oil.
  Consult the relevant engine manual for the correct specification.
- Use a good quality diesel fuel that is free of water and other pollutants.
- Avoid the generator set having to provide maximum power continuously.
- Always follow the safety advice, see page 4.

Initial Operation - Engine

Before starting the engine for the first time, carry out the following operations:

- Fill the engine with oil.
  Consult the relevant engine Manual for the quantity, specification and location of the filler opening.
- Check the oil level with the dipstick.
- Fill the cooling system.
  Consult the relevant engine Manual for the quantity, specification and how to fill the cooling system.
- Ensure that the fuel tank is filled with diesel fuel.
  Use only clean, water-free diesel fuel available commercially.
  The fuel system is self-bleeding.
- Check the battery and battery cable connections.
- Start the generator set engine and allow it to run for 10 minutes without load.
  Check the engine and all connections (fuel, coolant and exhaust) for leaks.
  Check the voltage supplied by the generator.

Running-in

In order to achieve a long operating life for your engine, take care with the following for the first 50 operating hours:

- Allow the engine to reach operating temperature before applying any load.
- Avoid long-term operation and generator full load.



Fire risk!

Only refuel when the engine is stopped. Do not spill fuel. Prevent unnecessary pollution.

4 Operation

Check the following points before starting:

- Engine oil level
- Coolant level
- Sea cock open
- Main switch between battery and generator set is 'ON'
- All energy consumers are switched off.

After repair work

Check that all safety equipment is fitted and all tools have been removed from the engine and/or generator. When starting with pre-heater plugs, do not use any extra starting aids (Quick-start sprays, etc.). This could cause an accident.

Starting

After a starting command the starting procedure, pre-heating - starting, will run completely automatically.

Starting, at the generator set

Press the button (I) at the generator panel to start the generator immediately.

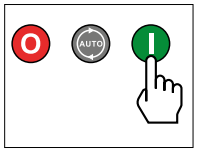

Starting, at the remote control panel

The generator panel must be in 'Auto Mode'.

1) Press the (AUTO) button to select 'Auto Mode'.

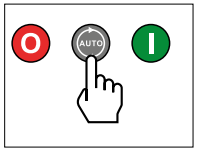

2) Press the button (I) at the remote control panel to start the generator set.

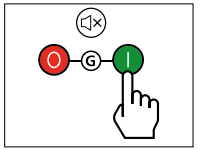

If selected the generator panel will remain in 'Auto Mode'.

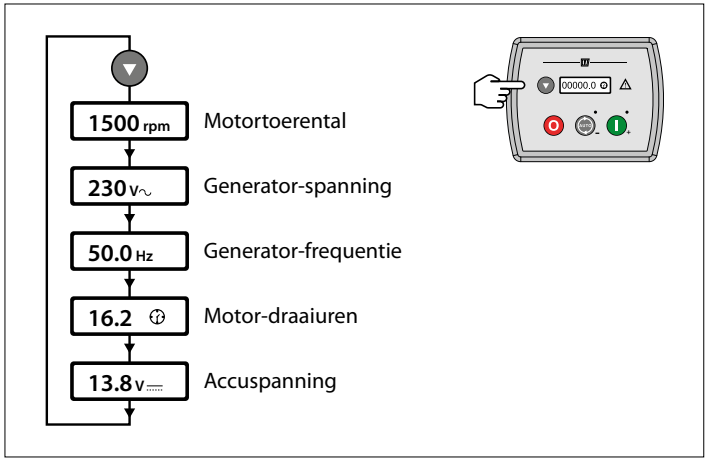

1 Single phase generator set

During operation of the generator set on the control panel information can be requested.

Press the button to scroll through lines of information.

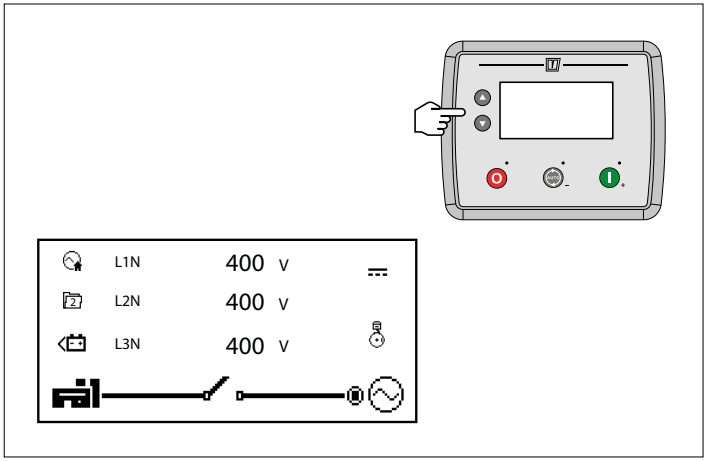

2 Three phase generator set

During operation of the generator set on the control panel information can be requested.

Press the or button to scroll through lines of information.

If one or more of the following faults occur, the generator set will be switched off automatically:
- low oil pressure,
- over temperature coolant,
- over temperature exhaust,
- over or under frequency,
- over or under voltage.

In case of an alternator failure, a warning is generated but the engine will continue running.

At the remote, if installed, a warning buzzer will sound.

On this panel is a 'alarm accept' button .

Press the button momentary and the buzzer will be switched off for a period of 10 minutes.

Keep the button pressed for more than 3 seconds and the buzzer will remain off as long as the alarm situation exists.

WARNING

NEVER switch the main switch (between battery and generator set) OFF while the engine is running.

WARNING

Avoid running on no load or very light load for extended periods.

This can lead to carbon deposits in the combustion chambers and incomplete combustion of fuel.

Stopping
Switch off all the ship's electrical consumers.

NOTE

Allow the generator set to run for about 1 minute without load.

Press at one of the panels the (O) button to stop the generator set.

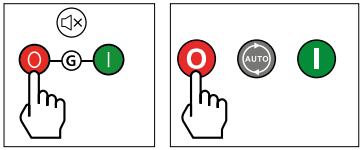

If selected the generator panel will remain in 'Auto Mode'.

Stopping when the Electrical System (12 Volt) breaks down.
When the electrical system (12 Volt) breaks down, the engine will stop immediately.

NOTE

When the generator set is not going to be used for a longer period of time, it is recommended that the seacock is closed and the main switch is turned to the OFF position.

WARNING

Always shut off the seacock if the generator set is not in use during cruising.

5 Maintenance

Introduction

The following guidelines should be observed for daily and periodic maintenance. Perform each function at the indicated time interval.

The intervals stated are for normal operational conditions. Service the unit more frequently under severe conditions.

Failure to carry out maintenance can result in faults and permanent damage to the engine or generator.

No claim can be made on the Guarantee if maintenance has been neglected.

Keep record of the following information in the logbook and/or the 'Service and Warranty Manual':

- Total engine hours (reading engine running hours on control panel).
- Amounts of oil, fuel and coolant needed for topping up.
- The dates and intervals at which the oil and coolant are changed.
- Parts on which maintenance is conducted and type of maintenance (adjustment, repair or replacement), and the results of each procedure.
- Changes in operating conditions, such as 'Exhaust gas became black', etc.

Every 10 hours or daily, before starting	page
Check engine oil level	*
Check coolant level	*
Check water strainer	*

After the first 50 hours	page
Drain water from fuel filter	*
Engine oil change	*
Replace oil filter	*
Replace fuel filter	*
Check flexible engine mounts	*
Check engine for leaks	*
Check tightness of all fasteners, bolts and nuts	*
Check V-belt	*
Check engine speed (RPM)/Fuel pump adjustment	22

Every 100 hours, at least once every year	page
Drain water from fuel filter	*
Engine oil change	*
Replace oil filter	*
Battery, cables and cable connections	*

Every 500 hours, at least once every year	page
Check engine speed (RPM)/Fuel pump adjustment	22
Replace fuel filter	*
Cleaning fuel lift pump	*
Check flexible engine mounts	*
Check engine for leaks	*
Check tightness of all fasteners, bolts and nuts	*
Check valve clearance	*
Check V-belt	*

DANGER

Stop the engine before carrying out any maintenance work.

Every 500 hours	page
Check glow plugs	[1]
Check and adjust injector pressure	[1]

Every 1000 hours, at least once every 2 years	page.
Raw water pump inspection	*
Replace coolant	*
Replace air filter	*

Every 1000 hours	page
Check starter motor	*
Check alternator	*
Generator	26

When required	page
Bleeding fuel system	25
Cleaning heat exchanger	*

*) For carrying out this maintenance work, consult the manual for the engine concerned.
It is possible that not all maintenance work described will be required on your generator set, this depends on the type of engine.

[1] Consult the service manual, work to be carried out by a VETUS dealer.

DANGER

Stop the engine before carrying out any maintenance work.

5 Maintenance

Checking the Engine Speed

The frequency of the mains voltage is not the same all over the world. This frequency can either be 50 or 60 Hz. For example, the frequency in Europe is usually 50 Hz, while in the United States it is 60 Hz.
The frequency of the generator set will be the same as the mains frequency in your cruising area.

N.B.: If you want to connect your on-board network to a dockside connection outside your usual cruising area, take care to check that both voltage and frequency are the same as that for your generator set.

Check engine Speed/Adjust Fuel Pump

Every 500 operating hours

The speed of the generator will decrease as the load increases. So adjust the generator as follows:

All **GHX** generator sets:
The RPM for a generator without load is about 3100 rpm (51.5 Hz).

All **GLX** generator sets:
The speed for a generator without load is about 1550 rpm (51.5 Hz) or about 1850 rpm (61.5 Hz).

Allow the engine to run until it is warm (coolant temperature about 60 degrees C (140 deg. F) or higher) before checking the speed and adjusting, if necessary.

Check the frequency on the display of the control panel.

The correct speed can be set using the adjusting screws on the fuel pump.

Check engine Speed/Adjust Fuel Pump

Every 500 operating hours.

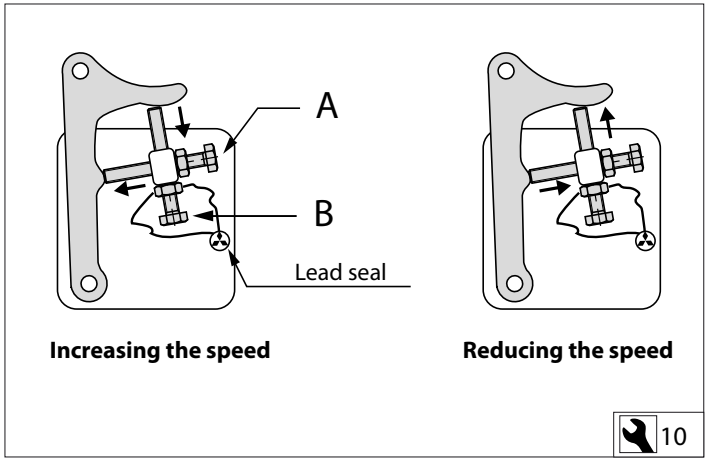

1 Adjusting the GHX8, GHX9, GHX14, GHX17, GLX6 and GLX7 Fuel Pump

- Unscrew both lock nuts and adjust the set screws until the correct speed has been reached. Then tighten up the lock nuts again.
- Turn set screw A when the speed has to be increased; turn set screw B when the speed has to be reduced.

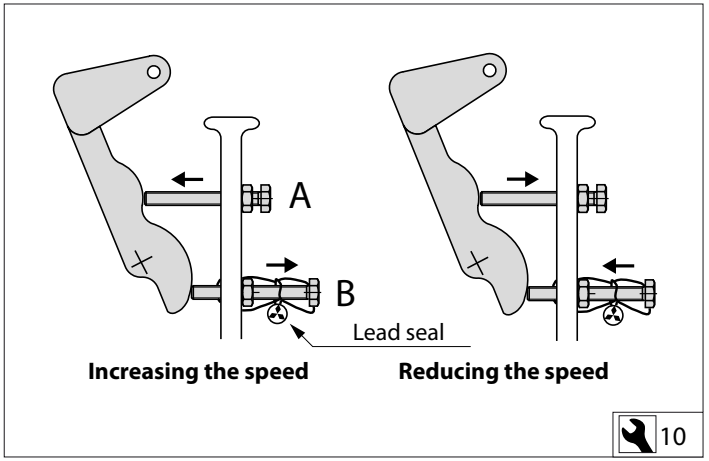

2 Adjusting the GHX24, GLX14 and GLX17 Fuel Pump

- Unscrew both lock nuts and adjust the set screws until the correct speed has been reached. Then tighten up the lock nuts again.
- Turn set screw A outwards when the speed has to be increased; turn set screw B outwards when the speed has to be reduced.

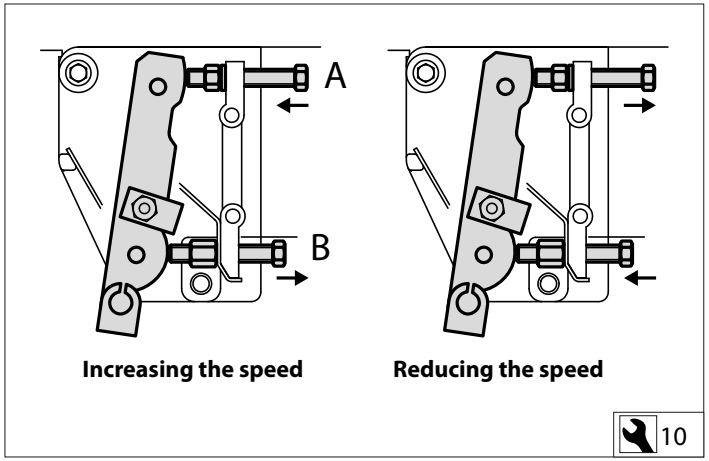

3 Adjusting the GLX20 and GLX24 Fuel Pump

- Unscrew both lock nuts and adjust the set screws until the correct speed has been reached. Then tighten up the lock nuts again.

- Turn set screw A outwards when the speed has to be increased; turn set screw B outwards when the speed has to be reduced.

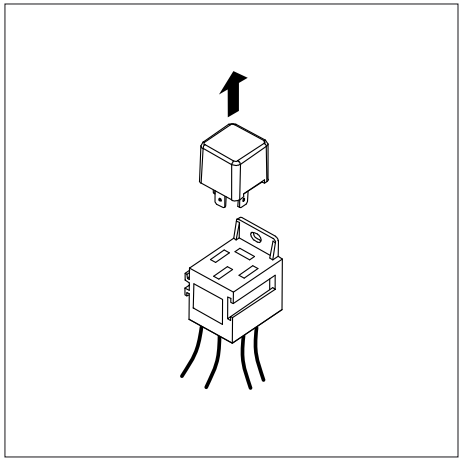

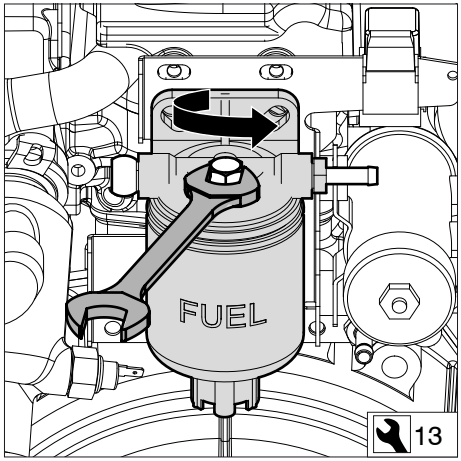

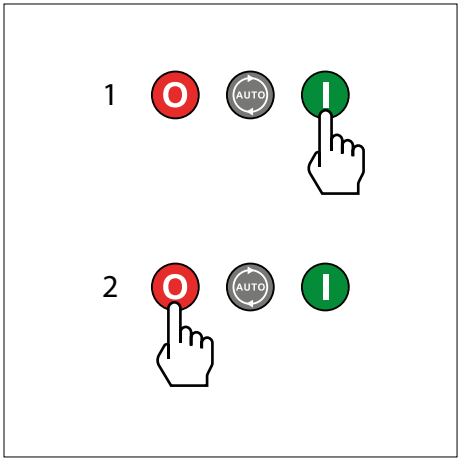

4 Bleeding

Proceed as follows if it is necessary to bleed the fuel system:
Take the auxiliary starter relay from the relay socket.
The auxiliary starter relay is recognizable by the connection wires: two yellow, a red and a black wire.

- Open the bleeding nipple on the fuel filter.
- Press the button switching 'ON' (1), the fuel lift pump will feed the fuel system, the engine will not be started.
- Close the bleeder nipple when all air has escaped.
- Stop bleeding by pressing the stop button (2).
- Re-install the auxiliary relay.

5 Maintenance

Generator
Every 1000 operating hours.

General

Cleaning the generator
The generator and AVR (Automatic Voltage Regulator) should be kept as clean as possible. Many electrical faults can be caused by dirt collecting. Remove any dirt and dust from the generator. Blow through the generator using oil-free compressed air. Take care no dust is blown into the windings. The inside and outside of the generator should always be kept free of water, oil and dirt.

Check that all electrical connections are correctly and firmly fixed.

The bearing is sealed and lubricated for life, so requires no further maintenance.



WARNING

NEVER work on the generator when it is running.
If it is necessary to check output voltage - with the generator running - it should **only** be done by someone who is competent to work on 'live' equipment. The connections carry mains voltage and are normally 'live' in relation to Earth.

6 Winter Lay-up

Preparation for Winter

Consult the separate engine Manual for taking it out of service for the winter.
It is not necessary to carry out any specific work on the generator at the start of the winter lay-up.

Preparation for Summer

Consult the separate engine Manual for preparation for use again at the start of the summer cruising season.

It is not necessary to carry out any specific work on the generator to prepare it for operation again.

7 Fault Finding, generator / control panel

When a fault occurs, check the following before carrying out the tests in the Table:

- The circuit breaker is 'ON'.
- The generator has not suffered any mechanical damage.
- It has not been affected by spilt oil, fuel, dirt or chemicals. If this is the case, clean or repair this before starting testing.
- The voltage regulator has not been exposed to water. If the regulator is wet, remove it from the connector box and dry thoroughly before refitting.

7 Fault Finding, generator/ control panel

1 No load, no voltage

Possible fault	Remedy
Voltage Regulator (AVR) faulty.	Replace the Voltage regulator (AVR).
Loss of residual magnetism.	Connect a 12 Volt battery for a short period to regenerate the field; plus (+) to EXC. + and minus (-) to EXC. -.
Stator winding short-circuit or poor connections.	Check the winding resistance. See 'Technical Data' for resistance values.
Rotor windings short-circuit or poor connections.	Check the winding resistance. See 'Technical Data' for resistance values.
Short-circuit in on-board circuit.	Trace the short-circuit and repair.

2 Low voltage

Possible fault	Remedy
Incorrect voltage setting of voltage regulator.	Adjust to the correct voltage.
Under frequency protection not properly set.	Check/adjust the setting of the under frequency protection for 50 Hz (60 Hz) nominal frequency.
Incorrect engine speed.	Check engine speed and re-adjust as required.
Voltage regulator (AVR) faulty.	Replace the voltage regulator (AVR).

3 High voltage

Possible fault	Remedy
Incorrect voltage setting of voltage regulator.	Adjust to the correct voltage.
Sensing connection wrong or open circuit.	Check the sensing connections.
Incorrect engine speed.	Check engine speed and re-adjust as required.
Voltage regulator (AVR) faulty.	Replace the voltage regulator (AVR).

4 Voltage oscillates

Possible fault	Remedy
Incorrect Voltage Regulator (AVR) stability setting.	Readjust the stability.
Engine runs irregularly due to lack of fuel, faulty or wrongly set fuel pump.	Ensure the supply of enough clean water-free fuel. Have the fuel pump checked by a specialist and repair or re-adjust as required.
Voltage Regulator (AVR) faulty.	Replace Voltage regulator (AVR).
Poor electrical connections.	Repair the connections.

5 Load, generator gets too hot

Possible fault	Remedy
Over-loaded.	Reduce the load by switching off some of your electrical equipment.
Voltage too high.	Adjust the Voltage Regulator to the correct voltage.
Blocked air inlet or outlet.	Clear the air inlet and outlet.
Hot air from engine and or generator is being used again as cooling air.	Prevent recirculation of hot air.

7 Fault Finding, generator/ control panel

Icon	Meaning	Description
	**EXHAUST TEMPERATURE ALARM**	This indicates a problem with the cooling of the exhaust system.
	**FAIL TO START**	The engine has failed to start after the preset number of starting attempts.
	**FAIL TO STOP**	The engine is still running despite having received a stop command.
	**LOW OIL PRESSURE**	The engine oil pressure is too low.
	**HIGH ENGINE TEMPERATURE**	The engine coolant temperature is too high.
	**UNDERSPEED**	The engine speed is too low.
	**OVERSPEED**	The engine speed is too high.
	CHARGE FAILURE	The alternator voltage is low.
	**BATTERY UNDER/OVER VOLTAGE**	The DC voltage has fallen below the preset minimum or risen above the preset maximum voltage level.
	**GENERATOR UNDER VOLTAGE**	The generator output voltage is too low.
	**GENERATOR OVER VOLTAGE**	The generator output voltage is too high.
	**GENERATOR UNDER FREQUENCY**	The generator output frequency is too low.
	**GENERATOR OVER FREQUENCY**	The generator output frequency is too high.
	**EMERGENCY STOP**	The emergency stop has been activated, causing the engine to stop. Power to the controller's 'Fuel' and 'Start' outputs is also interrupted.

8 Technical data

Type	:	GHX 8 SIC	GHX 14 SIC	GHX 24 SIC	GLX 6 SIC	GLX 14 SIC	GHX 8 TIC	GHX 14 TIC
Generator Specifications								
Mark	:	Sincro	Sincro	Sincro	Sincro	Sincro	Sincro	Sincro
Type	:	SKM 160 CA2	SKM 160 LA2-1	SKM 160 WA2-1	SKM 160 SA1	SKM 160 MA1	SKM 160 CA2	SKM 160 MA2
		Brushless, self-regulating self-exciting alternating current generator with automatic voltage regulator (AVR).						
Power	:	8 kW	14 kW	24 kW	6 kW	14 kW	8 kVA	14 kVA
at power factor	:	1.0	1.0	1.0	1.0	1.0	0.8	0.8
Voltage	:	230 V	230 V	230 V	230 V	230 V	3 x 400 V	3 x 400 V
Current	:	34 A	60 A	104 A	28 A	61 A	9 A	20 A
Voltage	:				(115 V)	(115 V)	(3 x 230 V)	(3 x 230 V)
Current	:				(56 A)	(122 A)	(16 A)	(35 A)
Frequency	:	50 Hz	50 Hz	50 Hz	50 Hz	50 Hz	50 Hz	50 Hz
Number of poles	:	2	2	2	4	4	2	2
Overload Power	:	Maximum start current for electro-motor 1.5 x nominal generator current						
Short circuit current	:	> 300 %						
Power factor	:	Between 0.8 inductive and 1						
Operating range	:	Minimum 4% of the nominal speed (RPM)						
Voltage Control	:	+ / - 1 %						
Total harmonic distortion	:	< 3 %						
Insulation Class	:	H						
Protection Grade	:	IP 44						

8 Technical data

	GHX 24 TIC	GLX 14 TIC	GLX 20 TIC	GHX 9 SIC	GHX 17 SIC	GLX 7 SIC	GLX 17 SIC	GHX 17 TIC	GLX 17 TIC	GLX 24 TIC
	Sincro	Sincro	Sincro	Sincro	Sincro	Sincro	Sincro	Sincro	Sincro	Sincro
	SKM 160 LA2	SKM 160 MA4	SKM 160 LB4	SKM 160 CA2	SKM 160 LA2	SKM 160 SA1	SKM 160 MA1	SKM 160 MA2	SKM 160 MA4	SKM 160 LB4
	Brushless, self-regulating self-exciting alternating current generator with automatic voltage regulator (AVR).									
	24 kVA	14 kVA	20 kVA	9 kW	17 kW	7,5 kW	17 kW	17 kVA	17 kVA	24 kVA
	0.8	0.8	0.8	1.0	1.0	1.0	1.0	0.8	0.8	0.8
	3 x 400 V	3 x 400 V	3 x 400 V	240 V	240 V	120 V	120 V	3 x 240 V	3 x 240 V	3 x 240 V
	35 A	20 A	29 A	37 A	71 A	62 A	142 A	41 A	41 A	57 A
	(3 x 230 V)	(3 x 230 V)	(3 x 230 V)			(240 V)	(240 V)	(3 x 415 V)	(3 x 415 V)	(3 x 415 V)
	(60 A)	(35 A)	(50 A)			(31 A)	(71 A)	(24 A)	(24 A)	(33 A)
	50 Hz	50 Hz	50 Hz	60 Hz	60 Hz	60 Hz	60 Hz	60 Hz	60 Hz	60 Hz
	2	4	4	2	2	4	4	2	4	4
	Maximum start current for electro-motor 1.5 x nominal generator current									
	> 300 %									
	Between 0.8 inductive and 1									
	Minimum 4% of the nominal speed (RPM)									
	+ / - 1 %									
	< 3 %									
	H									
	IP 44									

8 Technical data

Type	:	GHX 8 SIC	GHX 14 SIC	GHX 24 SIC	GLX 6 SIC	GLX 14 SIC	GHX 8 TIC	GHX 14 TIC
Generator Protection								
Main circuit	:	Automatic Fuse (Circuit Breaker)						
	:	32 A	63 A	100 A	25 A	63 A	12.5 A	20 A
					(63 A)	(125 A)	(16 A)	(32 A)
Engine Specifications								
Mark	:	VETUS/Mitsubishi						
Type	:	M2.18	M3.29	M4.45	M3.29	M4.45	M2.18	M3.29
General								
Nominal speed, RPM	:	3000	3000	3000	1500	1500	3000	3000
Max. Temperature raw water	:	30°C (86°F)						
Max. Ambient Temperature	:	40°C (104°F)						
Max. Tilt lengthwise	:	15°						
Max. Tilt crosswise	:	25°						
Weight	:	185 kg (408 lbs)	295 kg (650 lbs)	436 kg 961 lbs)	245 kg (540 lbs)	395 kg (871 lbs)	185 kg (408 lbs)	275 kg (606 lbs)

8 Technical data

	GHX 24 TIC	GLX 14 TIC	GLX 20 TIC	GHX 9 SIC	GHX 17 SIC	GLX 7 SIC	GLX 17 SIC	GHX 17 TIC	GLX 17 TIC	GLX 24 TIC
					Automatic Fuse (Circuit Breaker)					
	32 A	20 A	32 A	40 A	80 A	63 A	150 A	40 A	40 A	63 A
	(63 A)	(32 A)	(50 A)			(32 A)	(80 A)	(25 A)	(25 A)	(32 A)
	VETUS/Mitsubishi		VETUS/Hyundai		VETUS/Mitsubishi					VETUS/Hyundai
	M4.45	M4.45	VH4.65	M2.18	M3.29	M3.29	M4.45	M3.29	M4.45	VH4.65
	3000	1500	1500	3600	3600	1800	1800	3600	1800	1800
					30°C (86°F)					
					40°C (104°F)					
					15°					
					25°					
	395 kg (871 lbs)	375 kg (827 lbs)	505 kg (1113 lbs)	185 kg (408 lbs)	295 kg (650 lbs)	245 kg (540 lbs)	395 kg (871 lbs)	295 kg (650 lbs)	395 kg (871 lbs)	505 kg (1113 lbs)

Winding resistances

Type generator SKM 160	SA1	MA1	CA2	MA2	LA2 / LA2-1	WA2-1	MA4	LB4
For generator set model	GLX 6 SIC GLX 7 SIC	GLX 14 SIC GLX 17 SIC	GHX 8 SIC GHX 8 TIC GHX 9 SIC	GHX 14 TIC GHX 17 TIC	GHX 14 SIC GHX 17 SIC GHX 24 TIC	GHX 24 SIC	GLX 14 TIC GLX 17 TIC	GLX 20 TIC GLX 24 TIC
Winding Resistances at 20 °C (68 °F) (230 V - 50 Hz)								
Main Stator	0.46 Ω	0.16 Ω	0.72 Ω	0.49 Ω	0.25 Ω	0.11 Ω	0.47 Ω	0.21 Ω
Auxiliary	5.10 Ω	3.14 Ω	3.85 Ω	3.20 Ω	2.30 Ω	2.10 Ω	6.15 Ω	3.70 Ω
Main Rotor	12.7 Ω	19.7 Ω	8.80 Ω	9.5 Ω	11.1 Ω	14.1 Ω	15.5 Ω	23.2 Ω
Exciter Stator	10.5 Ω	12.0 Ω	12.0 Ω	12.0 Ω	12.0 Ω	12.0 Ω	12.0 Ω	12.0 Ω
Exciter Rotor, Ph - Ph	2.90 Ω	3.30 Ω	1.10 Ω	1.10 Ω	1.10 Ω	1.10 Ω	3.30 Ω	3.30 Ω
Excitation parameters								
at no load	6.5 V	6.5 V	5.2 V	4.7 V	5.0 V	5.5 V	8.0 V	7.2 V
	0.60 A	0.50 A	0.39 A	0.38 A	0.40 A	0.45 A	0.60 A	0.60 A
at load	19.0 V	15.5 V	22.5 V	23.7 V	23.8 V	24.0 V	25.0 V	24.5 V
	1.65 A	1.20 A	1.80 A	1.90 A	1.90 A	1.98 A	2.0 A	1.95 A

9 Operating Media

Operating Media

These are

- Engine oil
- Diesel fuel
- Coolant fluid

Consult the relevant engine Manual for specifications and quantities of the liquids above.

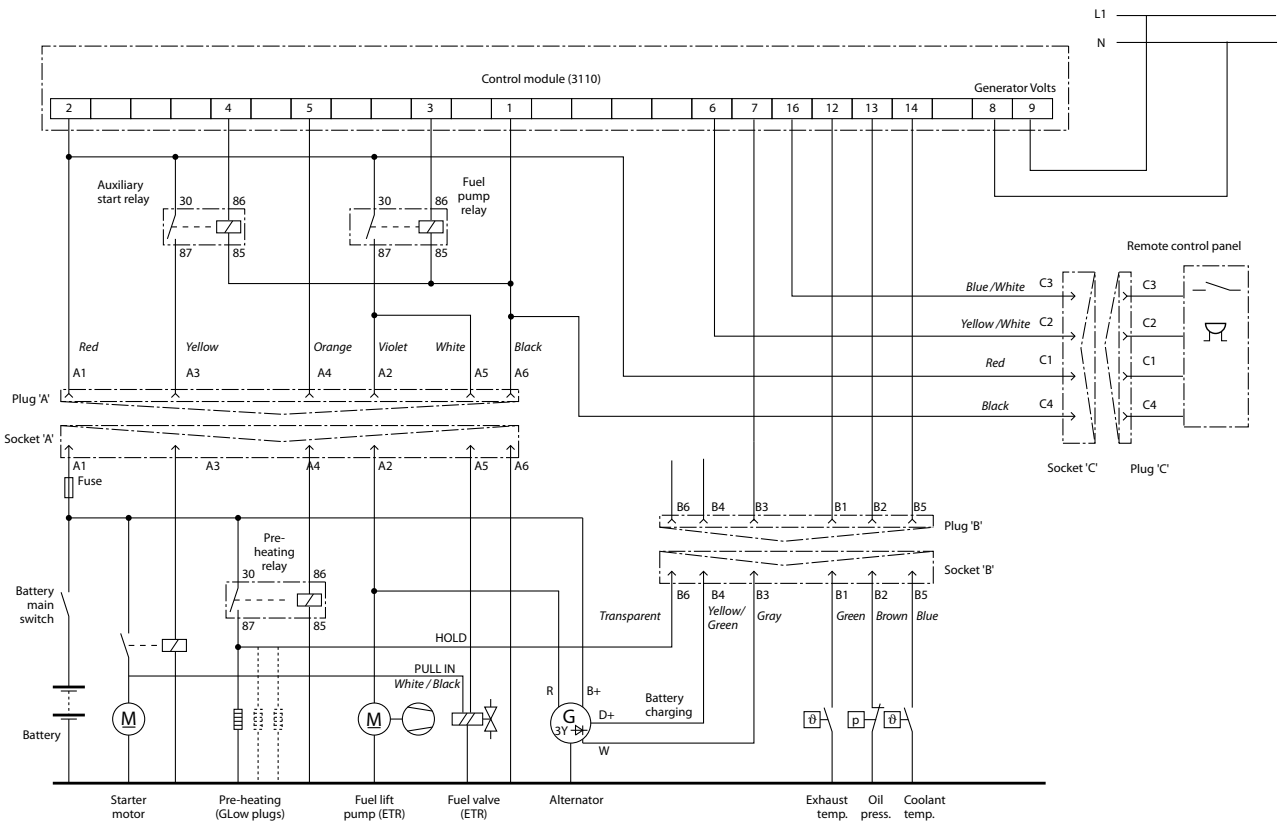
L1
N
Control module (3110)
Generator Volts
2
4
5
3
1
6
7
16
12
13
14
8
9
Auxiliary start relay
Fuel pump relay
30
86
87
85
Remote control panel
Blue /White
Yellow /White
Red
Black
C3
C2
C1
C4
Socket 'C'
Plug 'C'
Red
Yellow
Orange
Violet
White
Black
A1
A3
A4
A2
A5
A6
Plug 'A'
Socket 'A'
Fuse
B6
B4
B3
B1
B2
B5
Plug 'B'
Socket 'B'
Pre-heating relay
Battery main switch
Transparent
Yellow/ Green
Gray
Green
Brown
Blue
HOLD
PULL IN
White / Black
R
B+
D+
W
Battery charging
Battery
Starter motor
Pre-heating (GLow plugs)
Fuel lift pump (ETR)
Fuel valve (ETR)
Alternator
Exhaust temp.
Oil press.
Coolant temp.

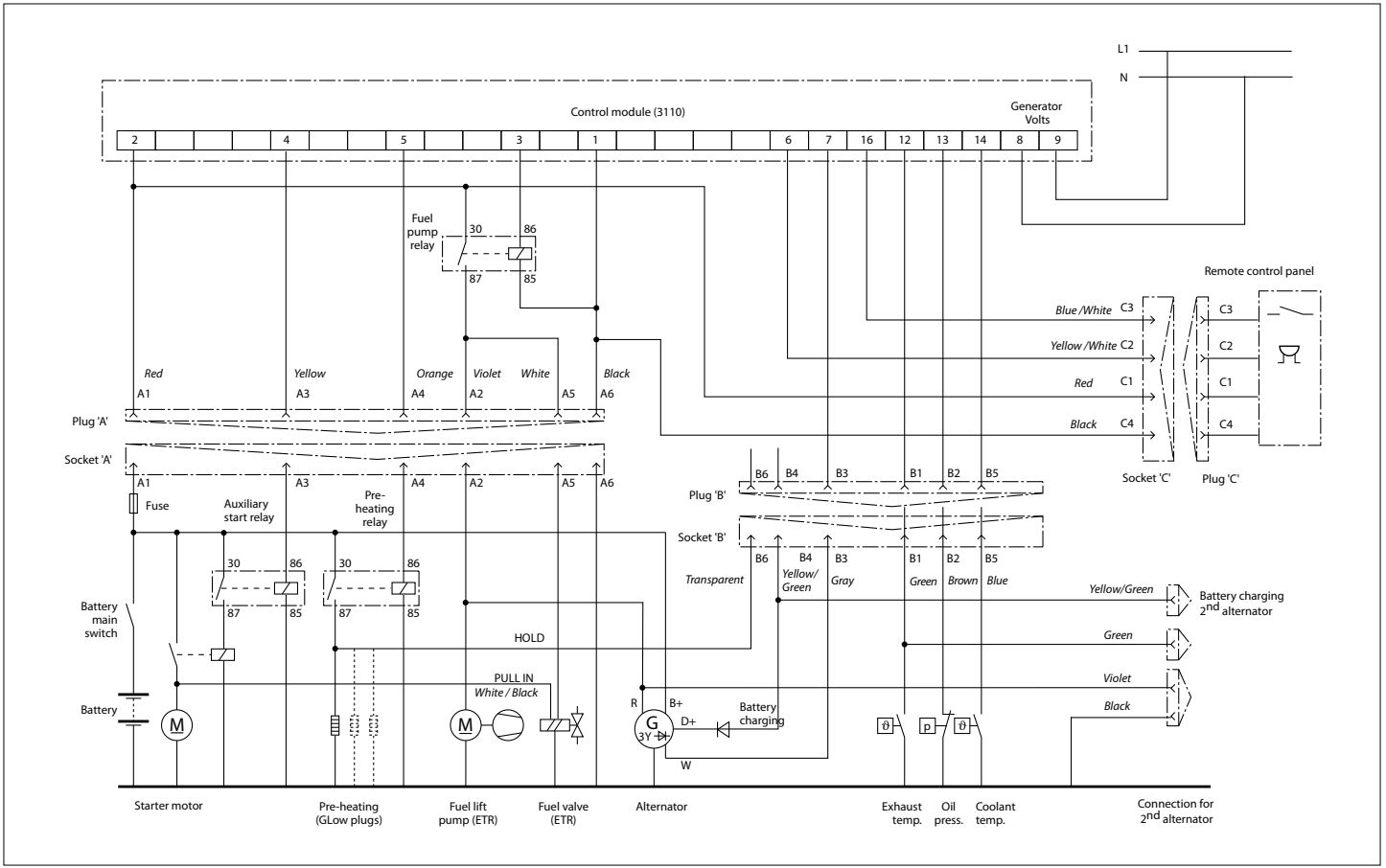
L1
N
Control module (3110)
Generator Volts
2 4 5 3 1 6 7 16 12 13 14 8 9
Fuel pump relay
30 86 87 85
Remote control panel
Blue /White C3
Yellow /White C2
Red C1
Black C4
Socket 'C'
Plug 'C'
Red Yellow Orange Violet White Black
A1 A3 A4 A2 A5 A6
Plug 'A'
Socket 'A'
Fuse
Auxiliary start relay
Pre-heating relay
Battery main switch
Battery
HOLD
PULL IN
White / Black
Plug 'B'
Socket 'B'
B6 B4 B3 B1 B2 B5
Transparent
Yellow/ Green
Gray
Green
Brown
Blue
Yellow/Green
Green
Violet
Black
Battery charging 2nd alternator
R
B+
D+
Battery charging
W
Starter motor
Pre-heating (GLow plugs)
Fuel lift pump (ETR)
Fuel valve (ETR)
Alternator
Exhaust temp.
Oil press.
Coolant temp.
Connection for 2nd alternator

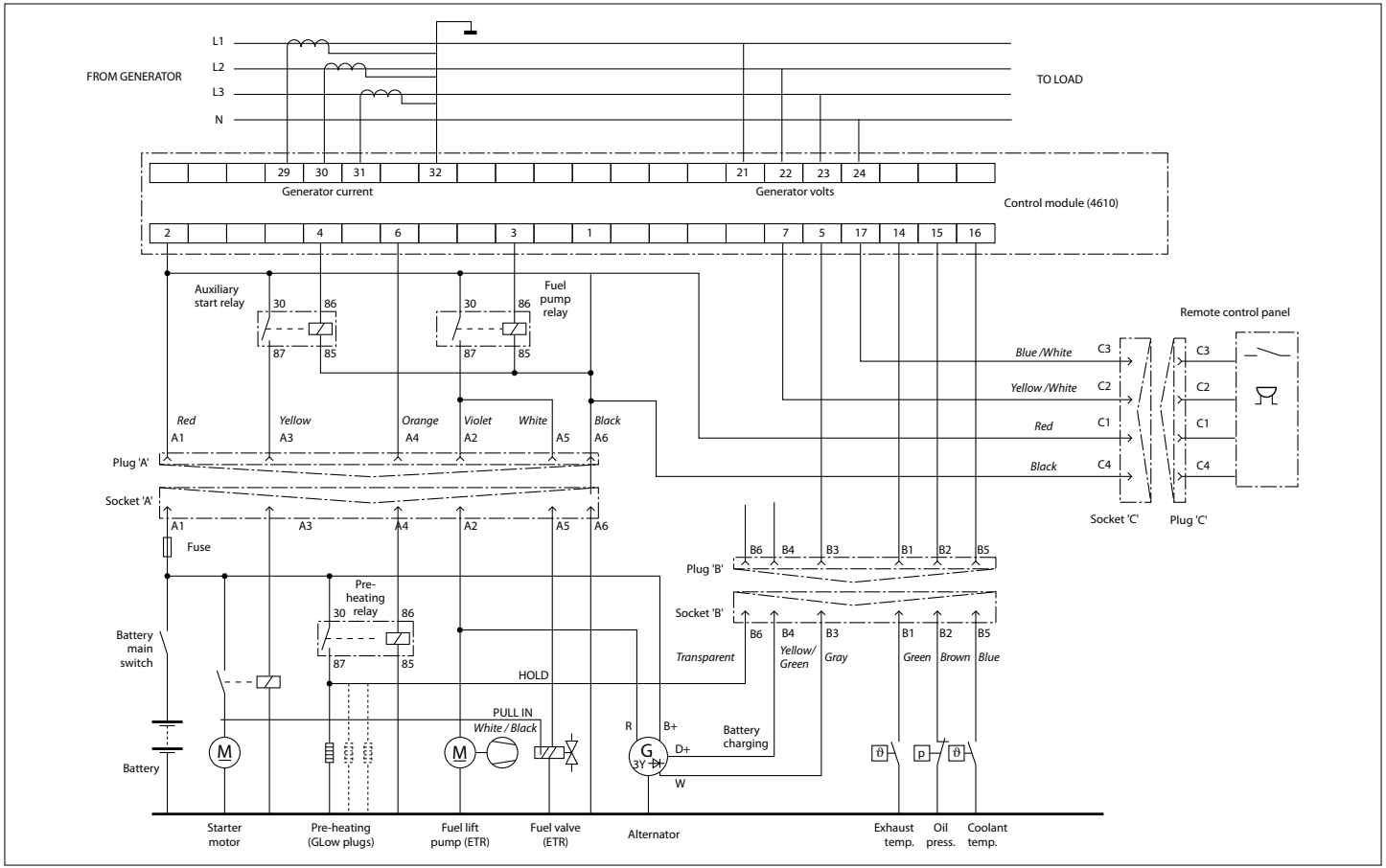
L1
L2
L3
N
FROM GENERATOR
TO LOAD
29 30 31 32 21 22 23 24
Generator current
Generator volts
Control module (4610)
2 4 6 3 1 7 5 17 14 15 16
Auxiliary start relay
Fuel pump relay
30 86 87 85
Remote control panel
Blue /White C3
Yellow /White C2
Red C1
Black C4
Socket 'C'
Plug 'C'
Red Yellow Orange Violet White Black
A1 A3 A4 A2 A5 A6
Plug 'A'
Socket 'A'
Fuse
Pre-heating relay
Battery main switch
HOLD
PULL IN
White / Black
Battery
B6 B4 B3 B1 B2 B5
Plug 'B'
Socket 'B'
Transparent
Yellow/ Green
Gray
Green
Brown
Blue
R
B+
D+
W
Battery charging
Starter motor
Pre-heating (GLow plugs)
Fuel lift pump (ETR)
Fuel valve (ETR)
Alternator
Exhaust temp.
Oil press.
Coolant temp.

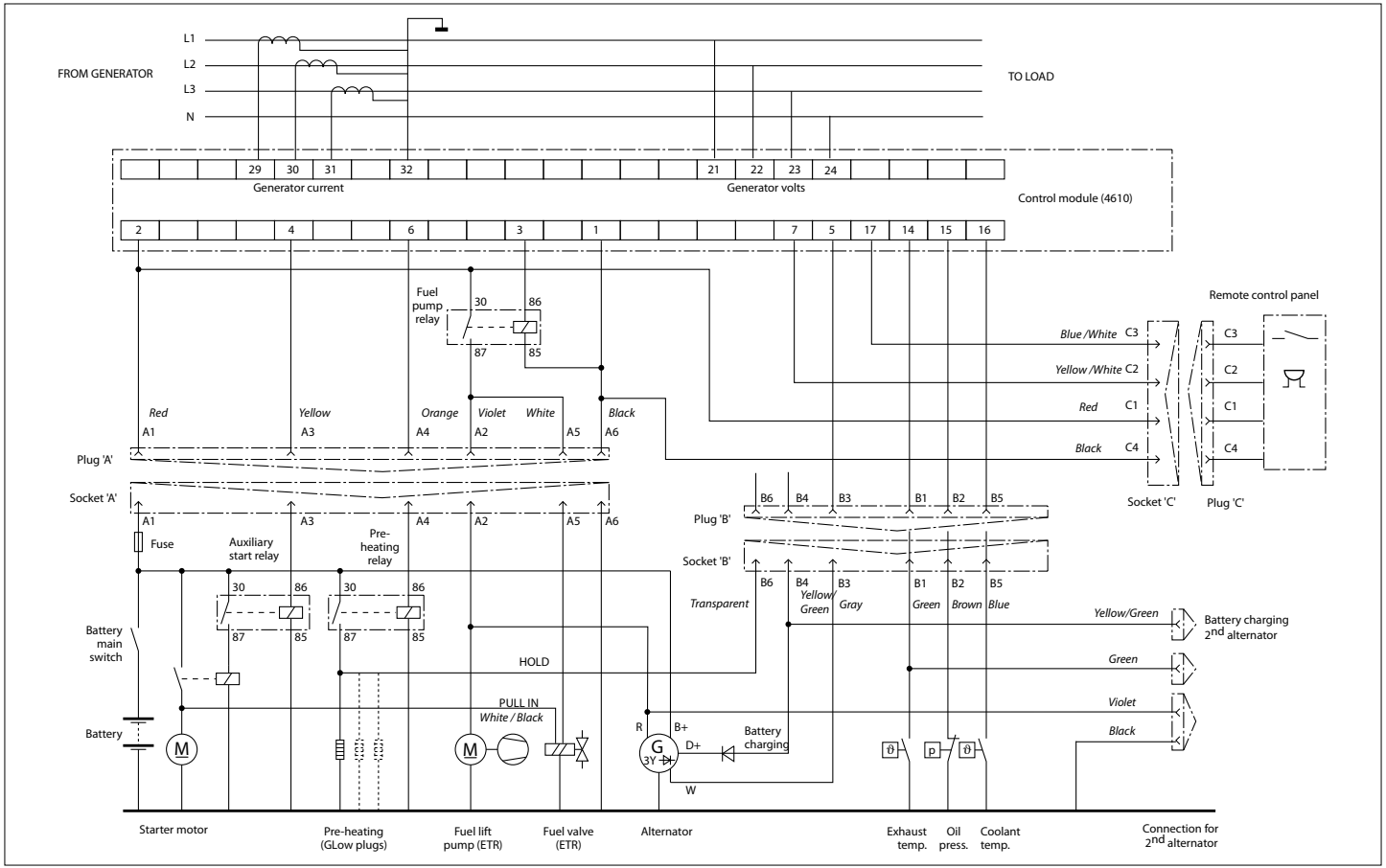
FROM GENERATOR
L1
L2
L3
N
TO LOAD
29 30 31 32 21 22 23 24
Generator current
Generator volts
Control module (4610)
2 4 6 3 1 7 5 17 14 15 16
Fuel pump relay
30 86 87 85
Remote control panel
Blue /White C3
Yellow /White C2
Red C1
Black C4
Socket 'C'
Plug 'C'
Red Yellow Orange Violet White Black
A1 A3 A4 A2 A5 A6
Plug 'A'
Socket 'A'
Fuse
Auxiliary start relay
Pre-heating relay
Battery main switch
Battery
HOLD
PULL IN
White / Black
B6 B4 B3 B1 B2 B5
Plug 'B'
Socket 'B'
Transparent
Yellow/ Green
Gray
Green
Brown
Blue
Yellow/Green
Battery charging 2nd alternator
Green
Violet
Black
R
B+
D+
W
G
3Y
Battery charging
M
Starter motor
Pre-heating (GLow plugs)
Fuel lift pump (ETR)
Fuel valve (ETR)
Alternator
Exhaust temp.
Oil press.
Coolant temp.
Connection for 2nd alternator

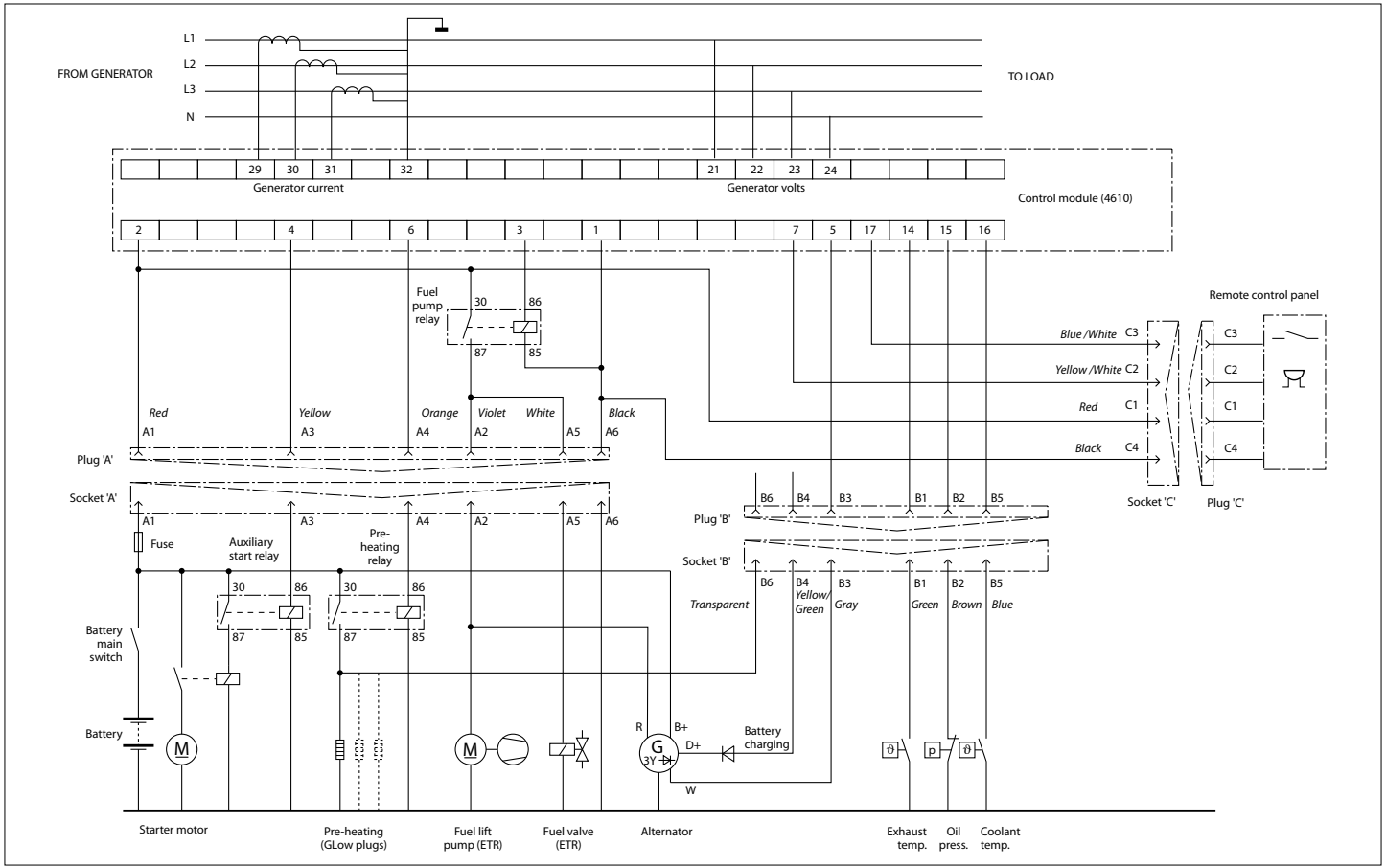
FROM GENERATOR
L1
L2
L3
N
TO LOAD
29 30 31 32 21 22 23 24
Generator current
Generator volts
Control module (4610)
2 4 6 3 1 7 5 17 14 15 16
Fuel pump relay
30 86 87 85
Remote control panel
Blue /White C3
Yellow /White C2
Red C1
Black C4
Socket 'C'
Plug 'C'
Red Yellow Orange Violet White Black
A1 A3 A4 A2 A5 A6
Plug 'A'
Socket 'A'
Fuse
Auxiliary start relay
Pre-heating relay
Battery main switch
Battery
Plug 'B'
Socket 'B'
B6 B4 B3 B1 B2 B5
Transparent
Yellow/ Green
Gray
Green
Brown
Blue
R
B+
D+
W
Battery charging
G
3Y
Starter motor
Pre-heating (GLow plugs)
Fuel lift pump (ETR)
Fuel valve (ETR)
Alternator
Exhaust temp.
Oil press.
Coolant temp.

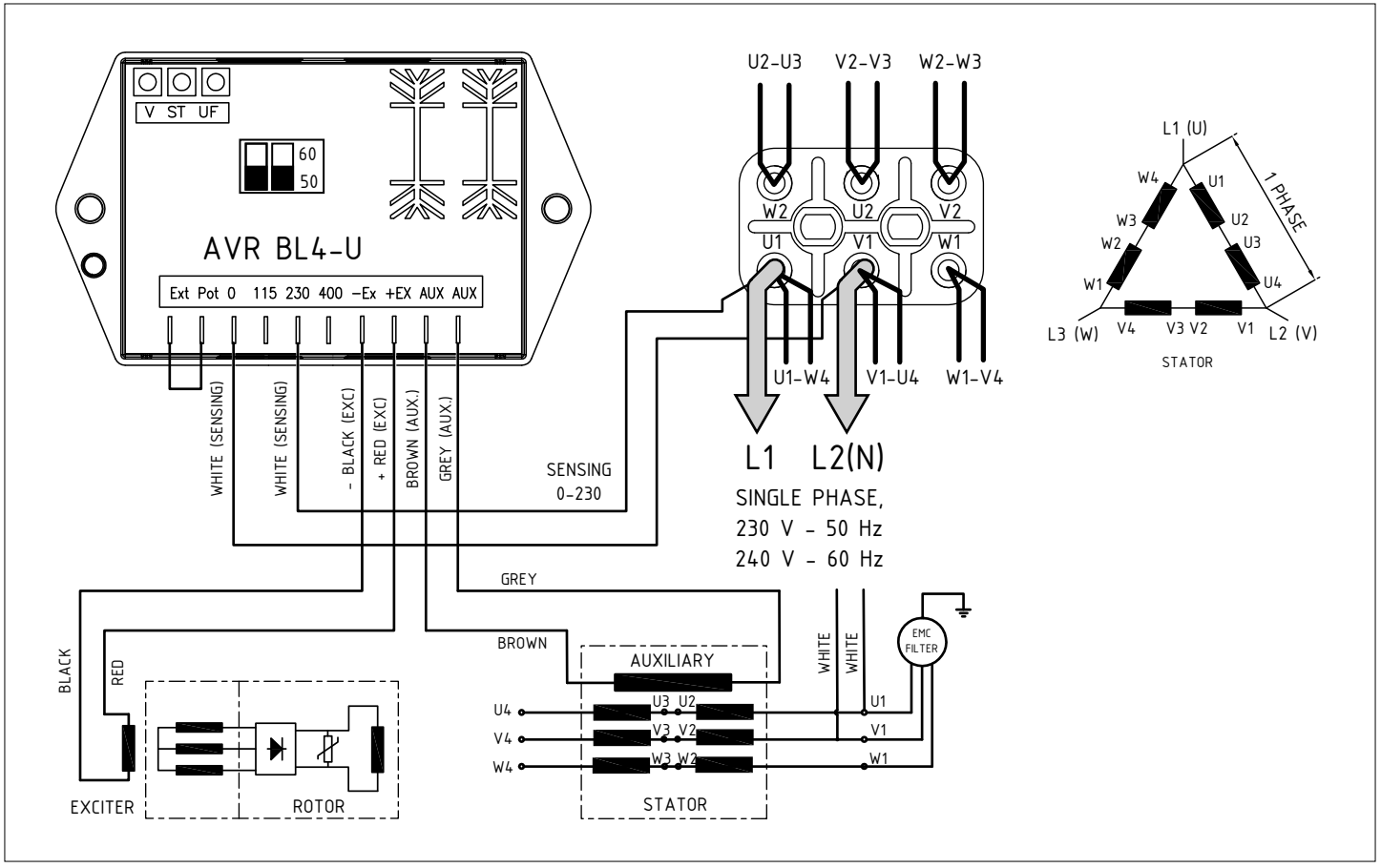
V ST UF
60
50
AVR BL4-U
Ext Pot 0 115 230 400 –Ex +EX AUX AUX
WHITE (SENSING)
WHITE (SENSING)
- BLACK (EXC)
+ RED (EXC)
BROWN (AUX.)
GREY (AUX.)
SENSING
0-230
U2-U3
V2-V3
W2-W3
W2
U2
V2
U1
V1
W1
U1-W4
V1-U4
W1-V4
L1 L2(N)
SINGLE PHASE,
230 V - 50 Hz
240 V - 60 Hz
L1 (U)
1 PHASE
L3 (W)
L2 (V)
STATOR
GREY
BROWN
BLACK
RED
EXCITER
ROTOR
AUXILIARY
U4
V4
W4
U3 U2
V3 V2
W3 W2
U1
V1
W1
WHITE
WHITE
EMC FILTER
STATOR

10 Wiring diagrams

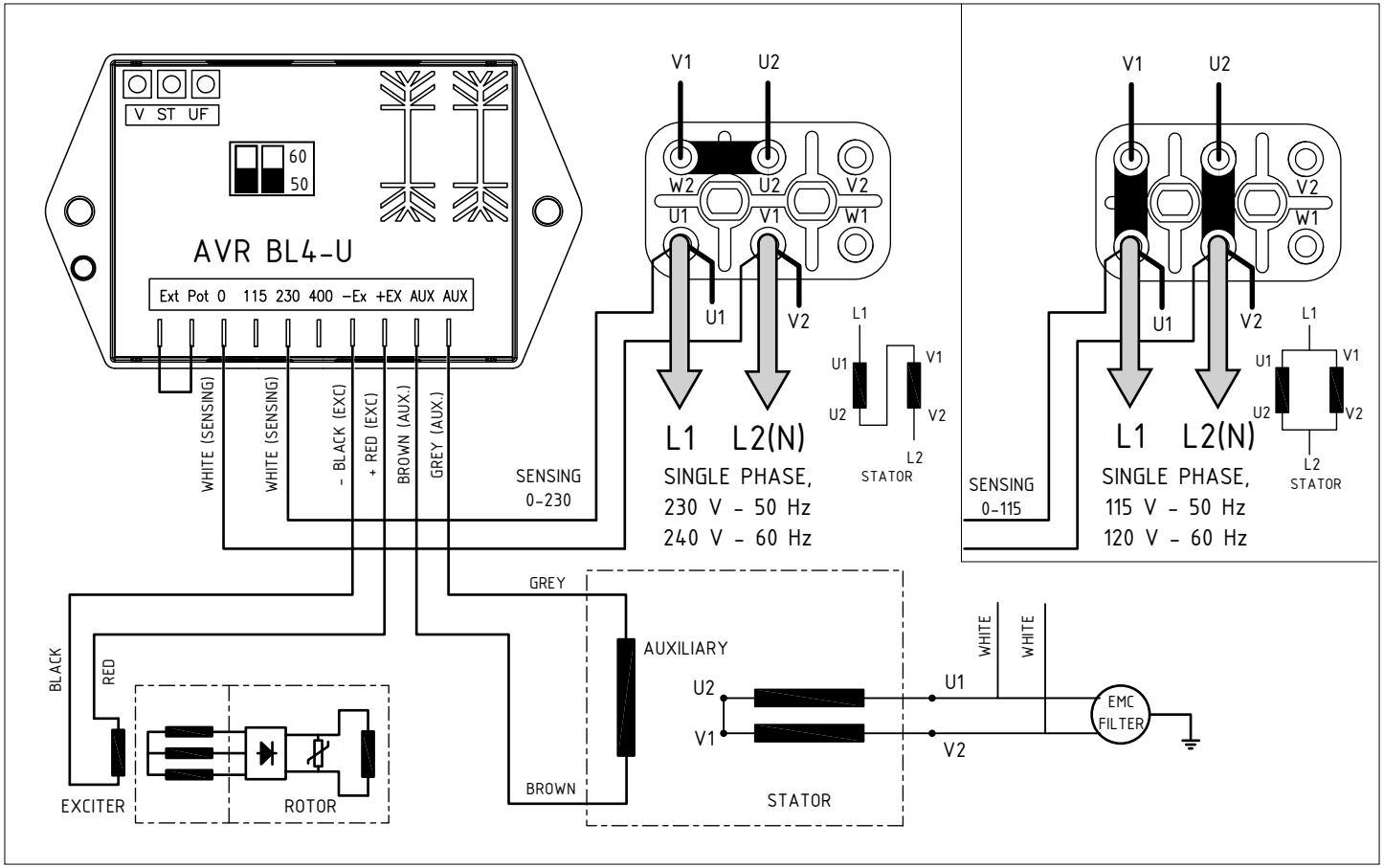

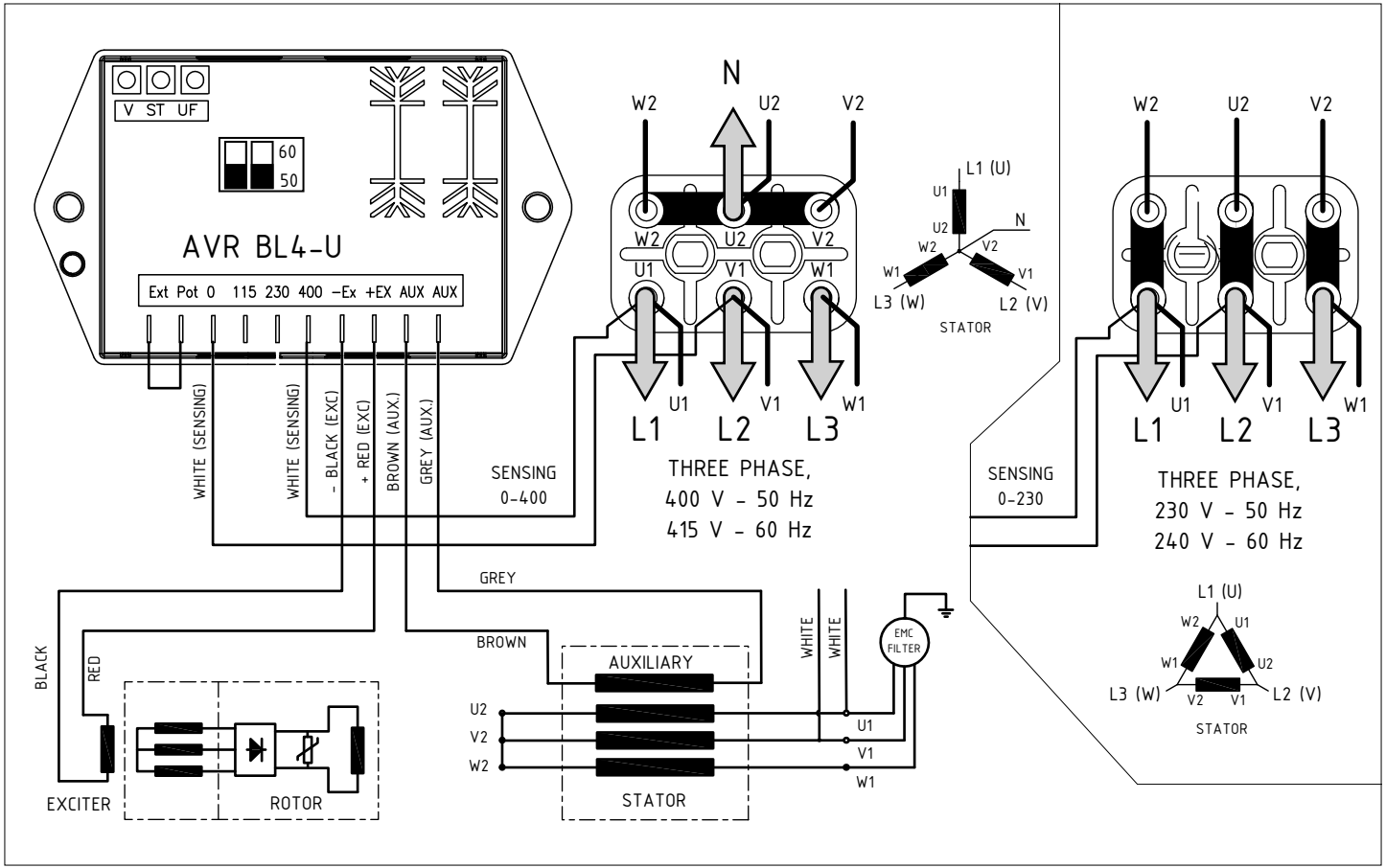
V ST UF
60
50
AVR BL4-U
Ext Pot 0 115 230 400 –Ex +EX AUX AUX
WHITE (SENSING)
WHITE (SENSING)
- BLACK (EXC)
+ RED (EXC)
BROWN (AUX.)
GREY (AUX.)
SENSING
0-400
N
W2 U2 V2
U1 V1 W1
L1 L2 L3
THREE PHASE,
400 V - 50 Hz
415 V - 60 Hz
L1 (U)
U1
U2
N
W2
V2
W1
V1
L3 (W)
L2 (V)
STATOR
SENSING
0-230
THREE PHASE,
230 V - 50 Hz
240 V - 60 Hz
GREY
BROWN
BLACK
RED
EXCITER
ROTOR
AUXILIARY
WHITE
WHITE
EMC
FILTER
U2
V2
W2
U1
V1
W1
STATOR

10 Wiring diagrams

Three Phase Generator SKM 160 CA2 **GHX 8 TIC**

Three Phase Generator SKM 160 MA4 **GLX 14 TIC** **GLX 17 TIC**

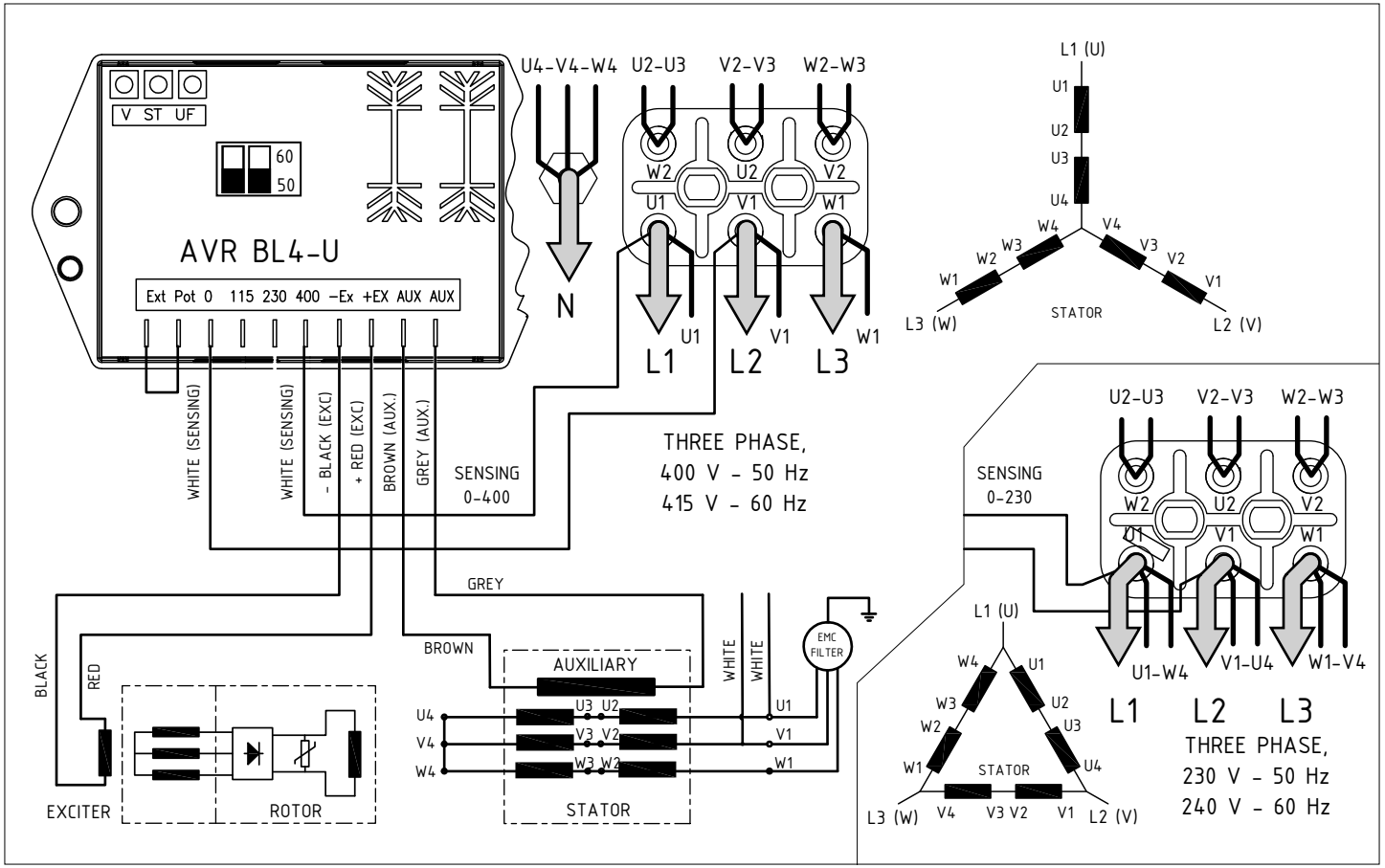

11 Overall dimensions

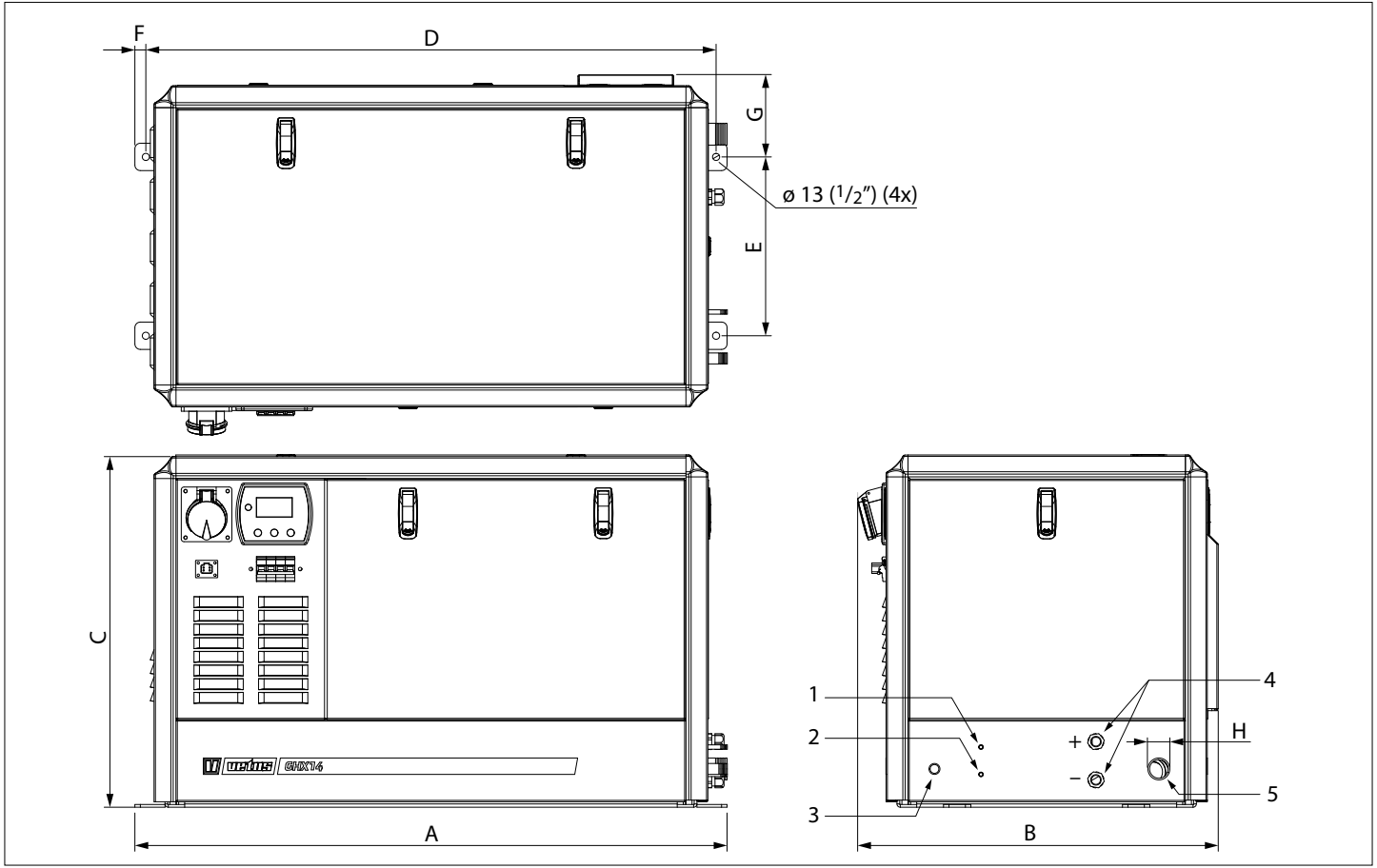

		A	B	C	D	E	F	G	H
GLX 6 SIC	GLX 7 SIC	927 (36 1/2″)	657 (25 7/8″)	644 (25 3/8″)	887 (34 15/16″)	297 (11 11/16″)	20 (13/16″)	165 (6 1/2″)	40
GHX 8 SIC / TIC	GHX 9 SIC	884 (34 13/16″)	659 (25 15/16″)	571 (22 1/2″)	844 (33 1/4″)	327 (12 7/8″)	20 (13/16″)	150 (5 7/8″)	40
GHX 14 SIC / TIC	GHX 17 SIC / TIC	1082 (42 5/8″)	659 (25 15/16″)	641 (25 1/4″)	1042 (41″)	327 (12 7/8″)	20 (13/16″)	150 (5 7/8″)	40
GLX 14 SIC / TIC	GLX 17 SIC / TIC	1172 (46 1/8″)	659 (25 15/16″)	644 (25 3/8″)	1132 (44 9/16″)	327 (12 7/8″)	20 (13/16″)	150 (5 7/8″)	50
GHX 24 SIC / TIC									50
GLX 20 TIC	GLX 24 TIC								60

1 Fuel supply 8 mm diam.
2 Fuel return 8 mm diam.
3 Raw water inlet 19 mm diam.
4 Battery connections
5 Exhaust 'H' diam.

VETUS Diesel Generator Sets 6 - 24 kVA

English

Havenstraat 11 - 3115 HC Schiedam - The Netherlands
Tel.: +31 (0)88 4884700 - sales@vetus.com - www.vetus.com

380502.01 2026-11 Printed in the Netherlands