Parts catalogue

H-Line

VH4.65
VH4.80

Deze onderdelencatalogus bevat waardevolle informatie voor onderhoud en service aan uw motor.

Wij adviseren U, bij vervanging alleen originele vetus onderdelen toe te passen.

Het typeplaatje bevat informatie over de type-aanduiding, het motornummer en de serie.

Gebruik deze informatie bij bestelling van onderdelen.

This parts'catalogue contains valuable information for maintenance and service over your engine.

For replacement, we recommend that you use only genuine vetus parts.

The identification tag contains information about model, serial number and series.

Use this information when ordering parts.

1	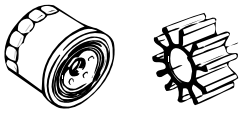	Reserve kits Spare parts kit
2	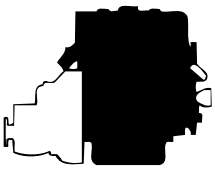	Motor Engine
3	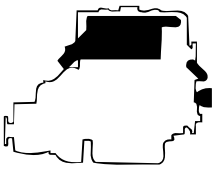	Koeling Cooling
4	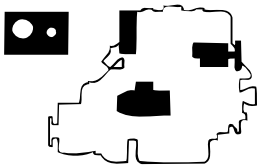	Electra, bediening en instrumenten Electrics, controls, instruments
5	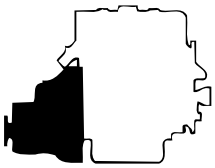	Aandrijving Transmission
6	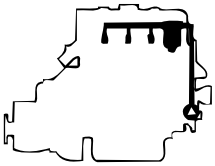	Brandstofsysteem Fuel system
7		Generator Generator
8		Gereedschappen Tools
9		
10		Accessoires Optionals

Info

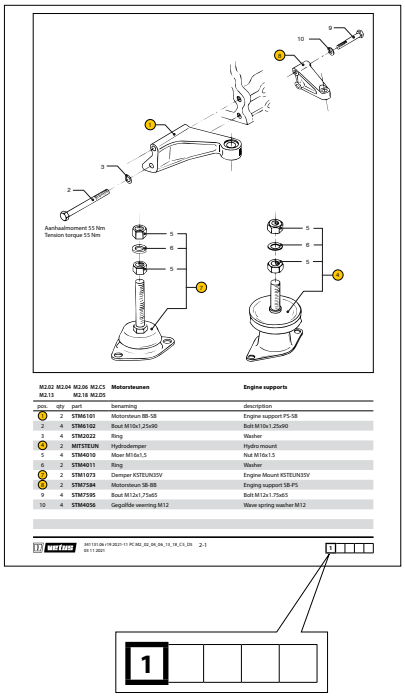

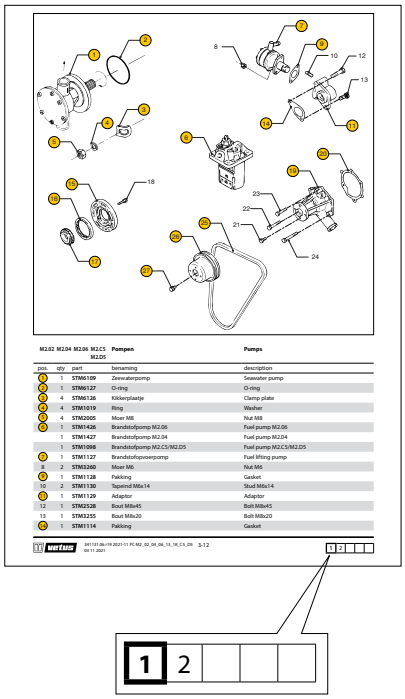

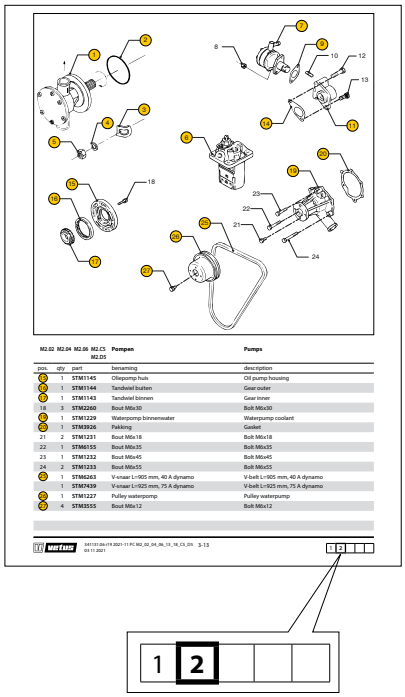

De volledige stuklijst staat op deze pagina.

The full parts list is shown on this page.

De stuklijst is verdeeld over 2 pagina's. Op deze pagina staat het **eerste** deel.

The parts list is spread over 2 pages. On this page the **first** part is shown.

De stuklijst is verdeeld over 2 pagina's. Op deze pagina staat het **tweede** deel.

The parts list is spread over 2 pages. On this page the **second** part is shown.

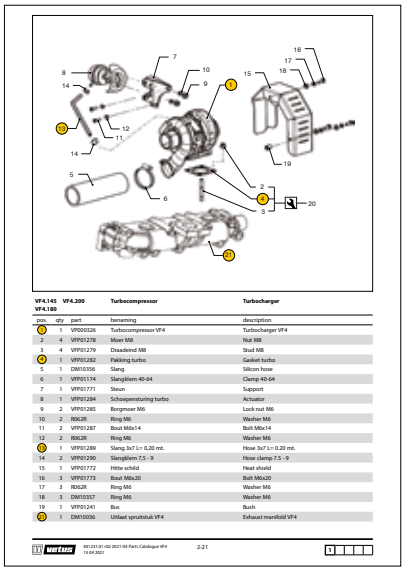

Verkrijgbaar als reserveonderdelen.

Andere onderdeelnummers zijn nog niet geactiveerd als reserveonderdeel. Deze zijn mogelijk beschikbaar op aanvraag.

Available as spare parts.

Remaining part numbers have not been set up as spare part. Potentially available on request.

Inhoud
Contents

pag. page	type		omschrijving	description
1-1	VH4.65	VH4.80	Service kit	Service kit
2-1	VH4.65	VH4.80	Pakkingset	Gasket kit
2-2	VH4.65	VH4.80	Pakkingset	Gasket kit
2-3	VH4.65	VH4.80	Cylinderblok	Cylinder block
2-4	VH4.65	VH4.80	Cylinderblok	Cylinder block
2-5	VH4.65	VH4.80	Cylinderblok	Cylinder block
2-6	VH4.65	VH4.80	Distributiedeksel	Distribution cover
2-7	VH4.65	VH4.80	Distributiedeksel	Distribution cover
2-8	VH4.65	VH4.80	Cylinderkop	Cylinder head
2-9	VH4.65	VH4.80	Krukas	Crank shaft
2-10	VH4.65	VH4.80	Krukas	Crank shaft
2-11	VH4.65	VH4.80	Zuiger + drijfstang	Piston + connection rod
2-12	VH4.65	VH4.80	Balansas	Balanger shaft
2-13	VH4.65	VH4.80	Nokkenas	Camshaft
2-14	VH4.65	VH4.80	Nokkenas	Camshaft
2-15	VH4.65	VH4.80	Nokkenas	Camshaft
2-16	VH4.65	VH4.80	Carterpan + kleppendeksel	Oil pan + rocker cover
2-17	VH4.65	VH4.80	Carterpan + kleppendeksel	Oil pan + rocker cover
2-18	VH4.65	VH4.80	Motorsteunen	Engine supports
3-1	VH4.65	VH4.80	Circulatiepomp	Circulation pump
3-2	VH4.65	VH4.80	Warmtewisselaar unit (<- 03-03)	Heatexchanger unit (<- 03-03)
3-3	VH4.65	VH4.80	Warmtewisselaar unit (<- 03-03)	Heatexchanger unit (<- 03-03)
3-4	VH4.65	VH4.80	Kielkoelspruitstuk (<- 03-03)	Keelcooler manifold (<- 03-03)
3-5	VH4.65	VH4.80	Kielkoelspruitstuk (<- 03-03)	Keelcooler manifold (<- 03-03)
3-6	VH4.65	VH4.80	Motoroliekoeler (Interkoeluitvoering)	Engine oilcooler (Inter-cool version)
3-7	VH4.65	VH4.80	Zeewaterpomp bevestiging	Seawaterpump fastening
3-8	VH4.65	VH4.80	Zeewaterpomp 03-2026 <-	Seawater pump 03-2026 <-
3-9	VH4.65	VH4.80	Zeewaterpomp 03-2026 ->	Seawater pump 03-2026 ->
3-10	VH4.65	VH4.80	Uitlaat injectiebocht	Exhaust injection elbow
3-11	VH4.65	VH4.80	Thermostaat	Thermostat
3-12	VH4.65	VH4.80	Thermostaat	Thermostat
3-13	VH4.65	VH4.80	Warmtewisselaar unit (03-03 ->)	Heatexchanger unit (03-03 ->)
3-14	VH4.65	VH4.80	Warmtewisselaar unit (03-03 ->)	Heatexchanger unit (03-03 ->)
3-15	VH4.65	VH4.80	Warmtewisselaar unit (03-03 ->)	Heatexchanger unit (03-03 ->)
3-16	VH4.65	VH4.80	Kielkoelspruitstuk (03-03 ->)	Keelcooler manifold (03-03 ->)
3-17	VH4.65	VH4.80	Kielkoelspruitstuk (03-03 ->)	Keelcooler manifold (03-03 ->)
3-18	VH4.65	VH4.80	Luchtfilter/ geluidsdemper	Aircleaner/ muffler
3-19	VH4.65	VH4.80	Motoroliekoeler (Kielkoeluitvoering)	Engine oilcooler (Keel-cool version)
4-1	VH4.65	VH4.80	Bedrading	Wiring
4-2	VH4.65	VH4.80	Bedrading	Wiring
4-3	VH4.65	VH4.80	Dynamo + startmotor	Alternator + starter

pag. page	type		omschrijving	description
4-4	**VH4.65**	**VH4.80**	Bediening	Controlls
4-5	**VH4.65**	**VH4.80**	Bediening	Controlls
4-6	**VH4.65**	**VH4.80**	Instrumentenpaneel model '22'	Instrument panel model '22'
4-7	**VH4.65**	**VH4.80**	Instrumentenpaneel model '22'	Instrument panel model '22'
4-8	**VH4.65**	**VH4.80**	Instrumentenpaneel model '34'	Instrument panel model '34'
4-9	**VH4.65**	**VH4.80**	Instrumentenpaneel model '34'	Instrument panel model '34'
4-10	**VH4.65**	**VH4.80**	Instrumentenpaneel model '34'	Instrument panel model '34'
5-1	**VH4.65**	**VH4.80**	Vliegwielhuis	Flywheel housing
5-2	**VH4.65**	**VH4.80**	Vliegwielhuis	Flywheel housing
5-3	**VH4.65**	**VH4.80**	Vliegwielhuis	Flywheel housing
5-4	**VH4.65**	**VH4.80**	Oliekoeler hydraulische keerkoppeling	Oil cooler hydraulic gearbox
6-1	**VH4.65**	**VH4.80**	Brandstofleidingen	Fuel pipes
6-2	**VH4.65**	**VH4.80**	Brandstofpomp	Fuel pump
6-3	**VH4.65**	**VH4.80**	Brandstoffilters	Fuel filters
6-4	**VH4.65**	**VH4.80**	Brandstoffilters	Fuel filters
10-1	**VH4.65**	**VH4.80**	Aanbouwdelen Powerpack	Adaptor parts Powerpack
10-2		**VH4.80**	Transportsteun	Transport support
10-3	**VH4.65**	**VH4.80**	Kit tweede dynamo 12V-85A	Kit second alternator 12V-85A
10-4	**VH4.65**	**VH4.80**	Kit tweede dynamo 12V-110A	Kit second alternator 12V-110A
			Register	Index

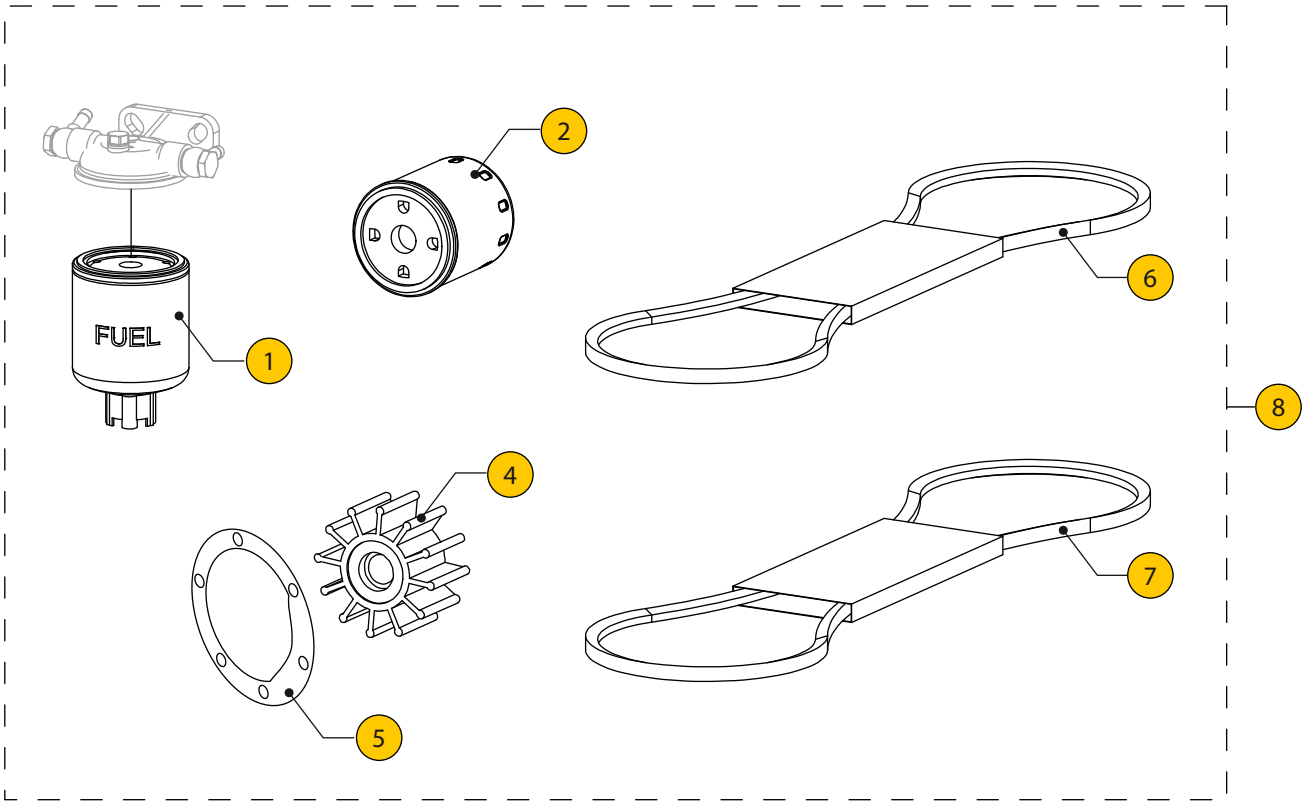

VH4.65 VH4.80 **Service kit** **Service kit**

pos.	qty	part	benaming	description
1	1	**STM3690**	Brandstoffilter	Fuel filter
2	1	**STM4910**	Oliefilter	Oil filter
4	1	**STM8074**	Impeller	Impeller
5	1	**STM8002**	Pakking	Gasket
6	1	**STM4509**	V-snaar 10x1200 (dynamo)	V-belt 10x1200 (alternator)
7	1	**STM4523**	V-snaar 10x780 (zeewaterpomp)	V-belt 10x780 (seawaterpump)
8	1	**STM9570**	Service kit (1+2+4+5+6+7)	Service kit (1+2+4+5+6+7)

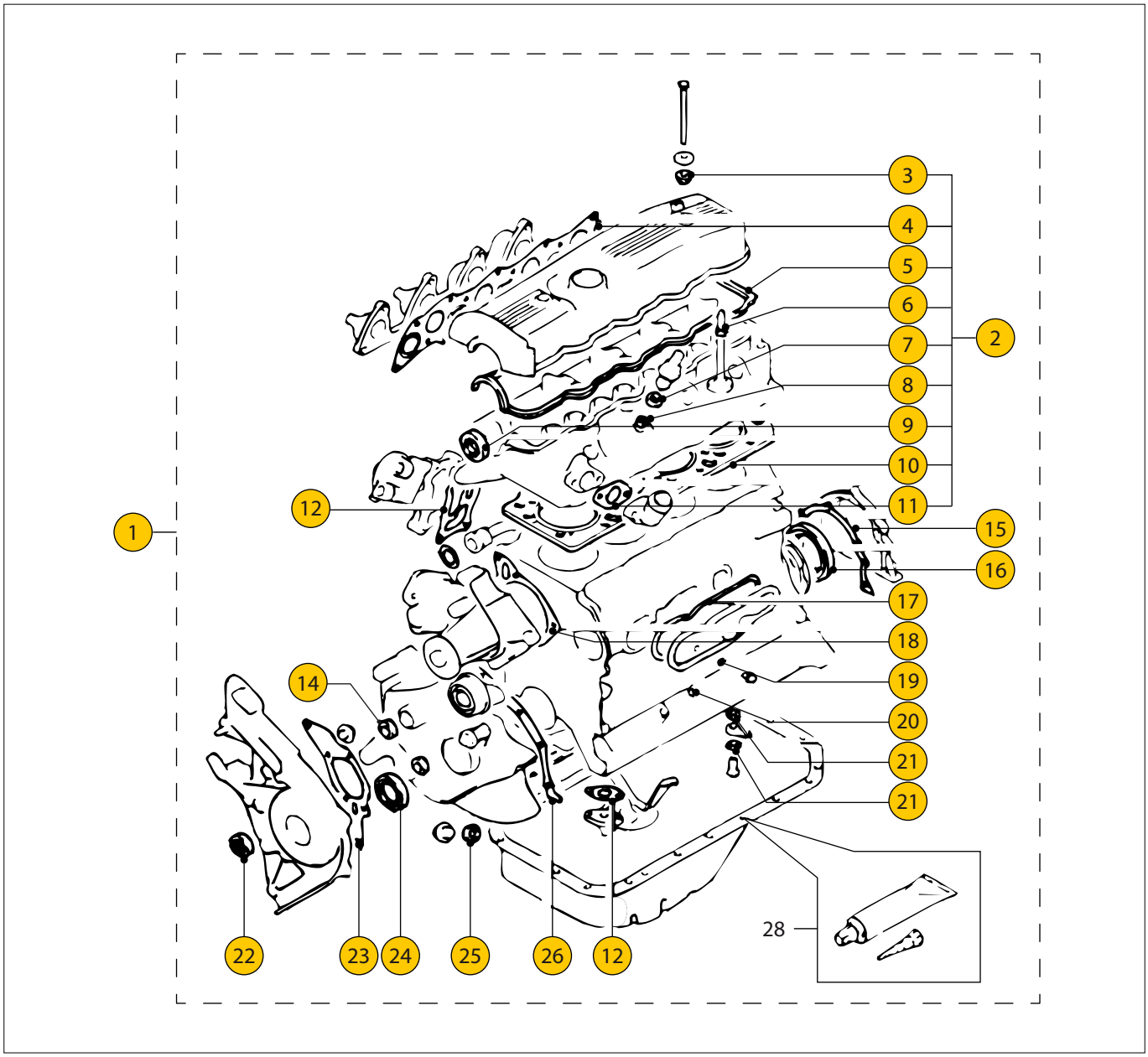

VH4.65 VH4.80 **Pakkingset** **Gasket kit**

pos.	qty	part	benaming	description
1	1	**STM4981**	Pakkingset overhal	Gasket kit overhal
2	1	**STM4982**	Koppakkingset	Cyl.headgasket kit
3	3	**STM4932**	Afdichting	Seal
4	1	**STM4980**	Uit/inlaatpakking	Ex./inlet gasket
5	1	**STM4929**	Kleppendekselpakking	Gasket
6	8	**STM4886**	Afdichting	Seal
7	4	**STM4951**	Afdichting	Seal
8	4	**STM4952**	Afdichting	Seal
9	1	**STM4782**	Afdichting	Seal
10	1	**STM4783**	Koppakking	Cil.head gasket
11	1	**STM4541**	Pakking	Gasket
12	1	**STM4909**	Pakking	Gasket
14	1	**STM4752**	Afdichting	Seal
15	1	**STM4723**	Pakking	Gasket
16	1	**STM4722**	Afdichting	Seal
17	1	**STM4728**	Pakking	Gasket
18	1	**STM4935**	Pakking	Gasket

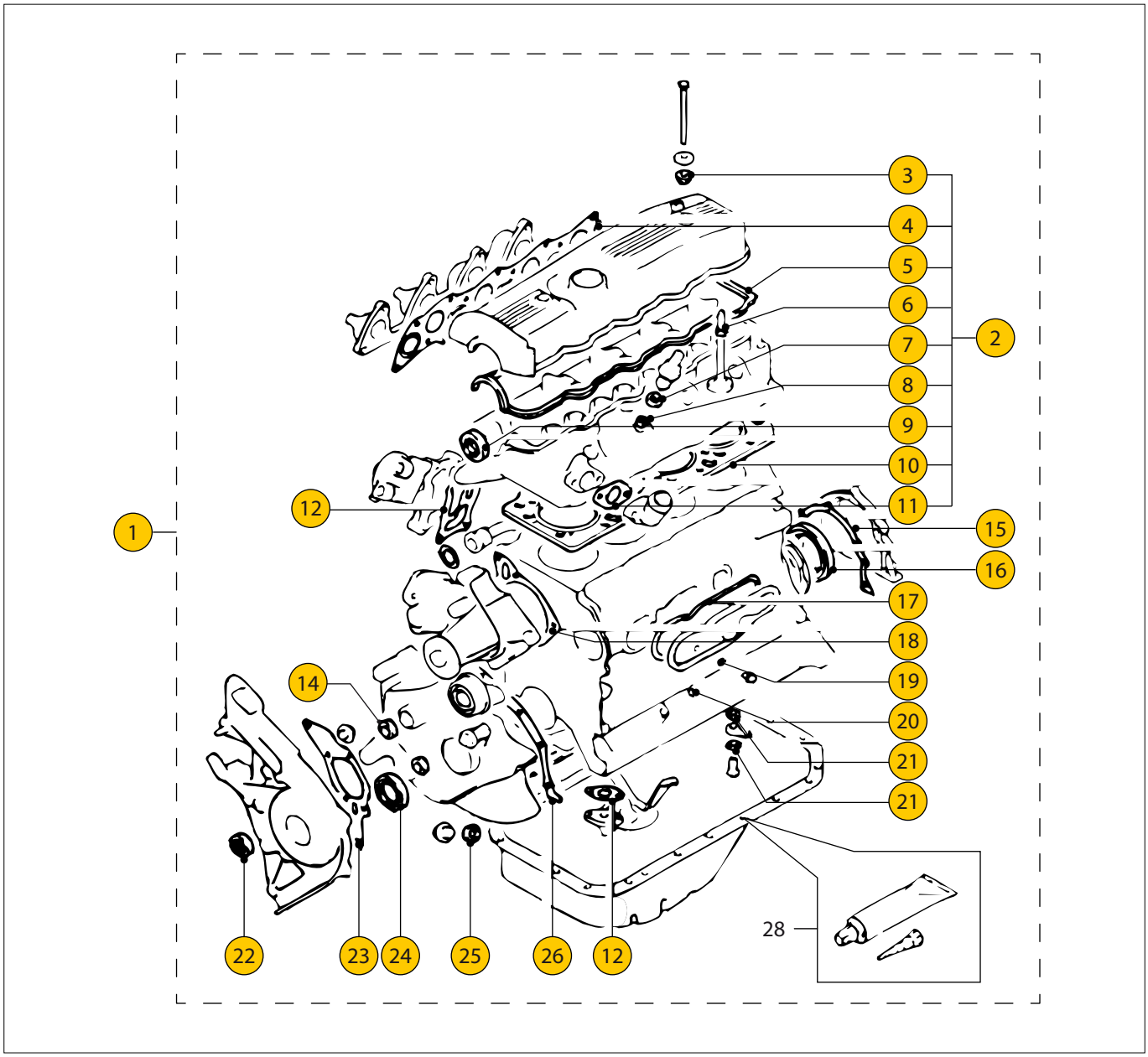

VH4.65 VH4.80 **Pakkingset** **Gasket kit**

pos.	qty	part	benaming	description
19	1	**STM4730**	O-ring	O-ring
20	1	**STM4730**	O-ring	O-ring
21	1	**STM4733**	Pakking	Gasket
22	2	**STM4984**	Afdichting	Seal
23	1	**STM4740**	Pakking	Gasket
24	1	**STM4753**	Pakking	Gasket
25	1	**STM4922**	Ring	Washer
26	1	**STM4759**	Pakking	Gasket
27	1	**STM4912**	Pakking	Gasket
28	1	**STM4983**	Vloeibare pakking	Liquid gasket

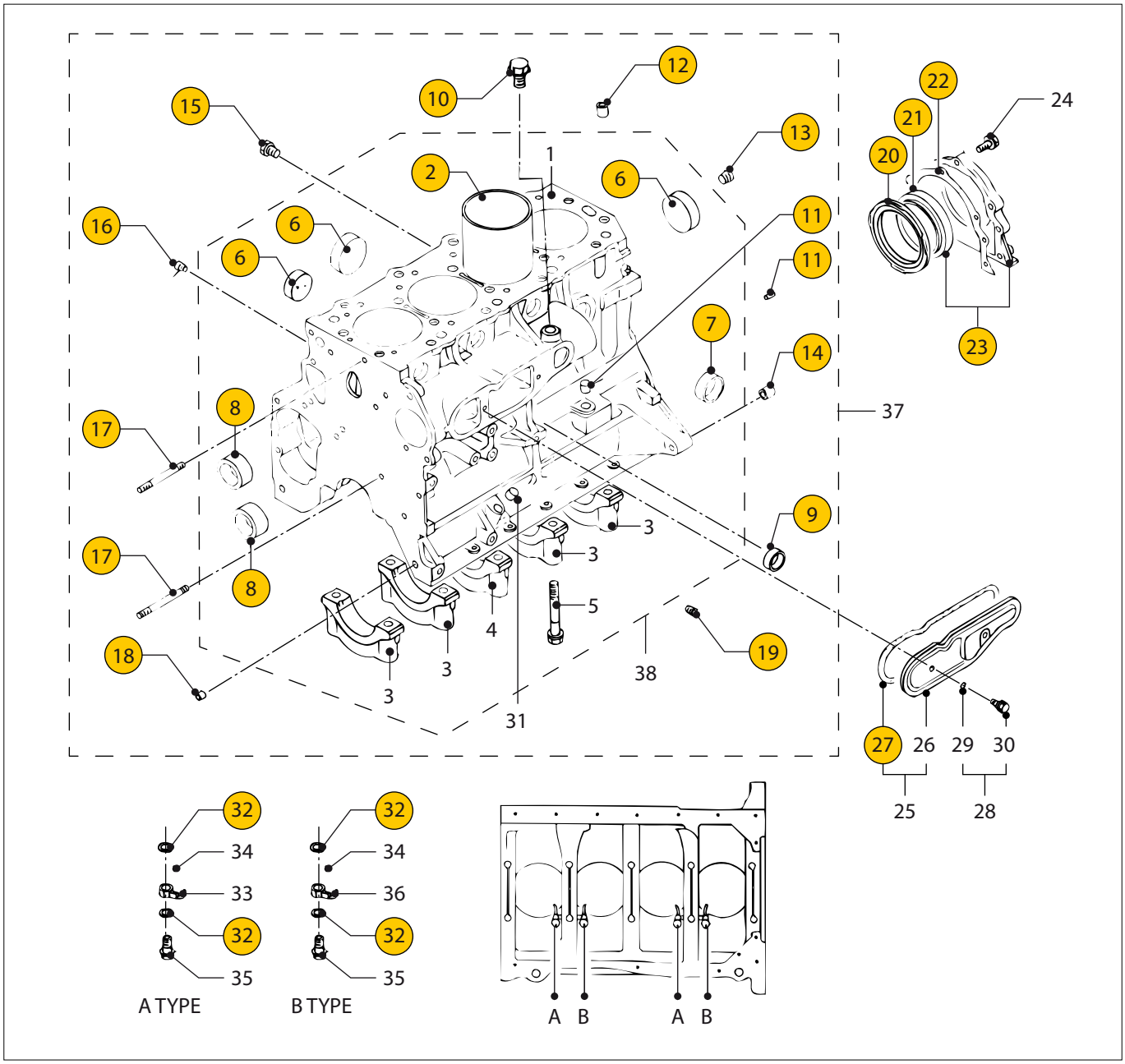

VH4.65 VH4.80 **Cylinderblok** **Cylinder block**

pos.	qty	part	benaming	description
1	1	**STM4702**	Cylinderblok	Cilinder block
2	4	**STM4703**	Cylinderbus	Cilinder bush
3	4	**STM4704**	Lagerkap	Bearing cap
4	1	**STM4705**	Lagerkap	Bearing cap
5	10	**STM4706**	Bout	Bolt
6	2	**STM4707**	Afdichtkap 50	Sealing cap 50
7	4	**STM4708**	Afdichtkap 50	Sealing cap 50
8	2	**STM4709**	Lager	Bearing
9	5	**STM4710**	Afdichtkap 28	Sealing cap
10	1	**STM4711**	Bout	Bolt
11	2	**STM4712**	Paspen 6mm	Pin 6mm
12	2	**STM4713**	Pasbus 12x13	Bush 12x13
13	1	**STM4714**	Plug PT3/8	Plug PT3/8
14	2	**STM4715**	Pasbus 10mm	Bush 10mm
15	1	**STM4716**	Plug PT1/4	Plug PT1/4
16	1	**STM4717**	Plug PT1/8	Plug PT1/8

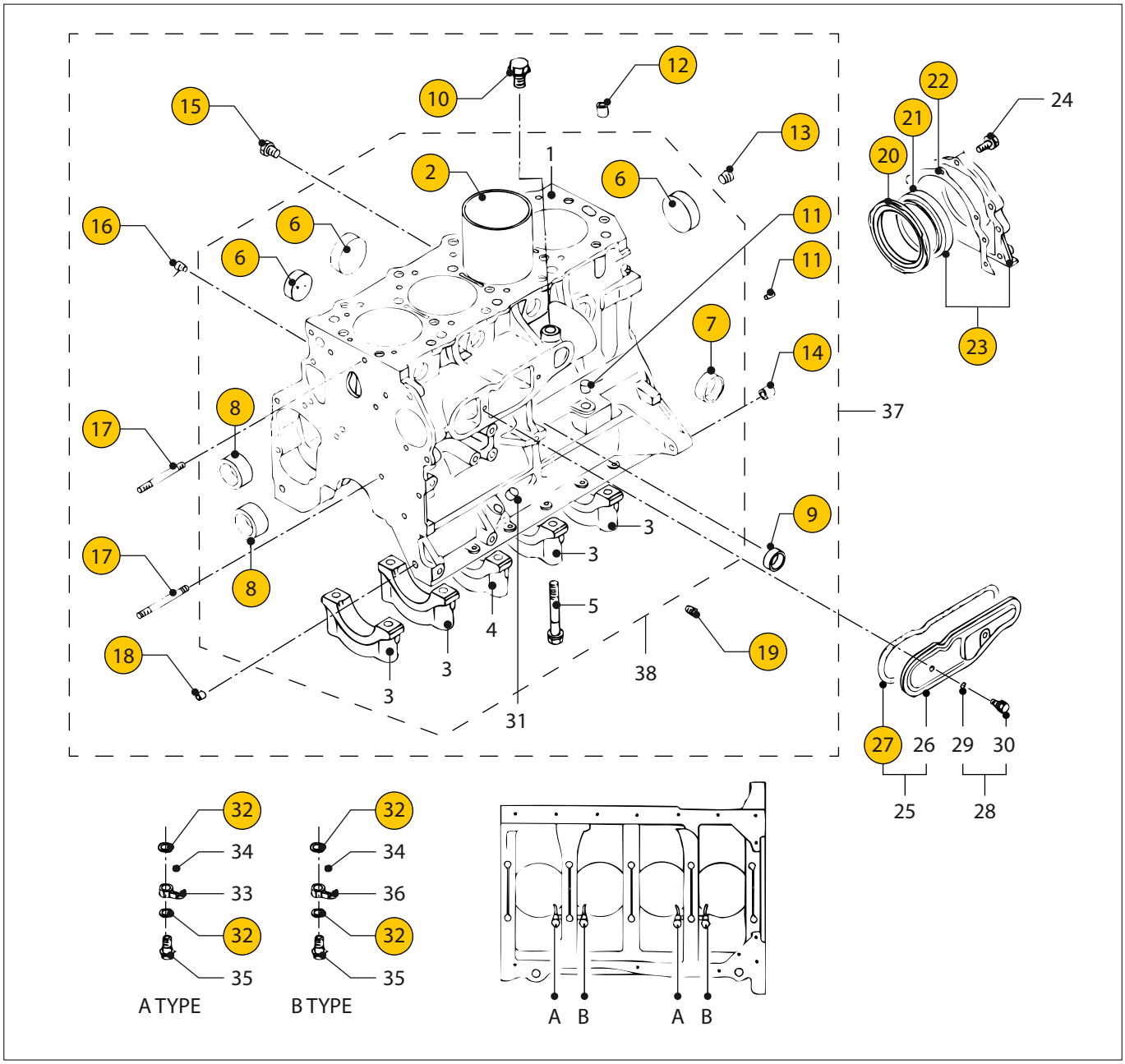

VH4.65 VH4.80 **Cylinderblok** **Cylinder block**

pos.	qty	part	benaming	description
17	2	**STM4718**	Tapeind	Stud
18	4	**STM4719**	Pasbus 8x9	Bush 8x9
19	1	**STM4720**	Plug PT1/8	Plug PT1/8
20	1	**STM4721**	Olieseperator	Oil seperator
21	1	**STM4722**	Oliekeerring	Oil sael
22	1	**STM4723**	Pakking	Gasket
23	1	**STM4724**	Deksel	Cover
24	5	**STM4725**	Bout 6x22	Bolt 6x22
25	1	**STM4726**	Deksel + pakking	Cover + gasket
26	1	**STM4727**	Deksel	Cover
27	1	**STM4728**	Pakking	Gasket
28	1	**STM4729**	O-ring + bout	O-ring + bolt
29	1	**STM4730**	O-ring	O-ring
30	1	**STM4731**	Bout 6x12	Bolt 6x12
31	1	**STM4732**	Plug	Plug
32	8	**STM4733**	Pakking	Gasket

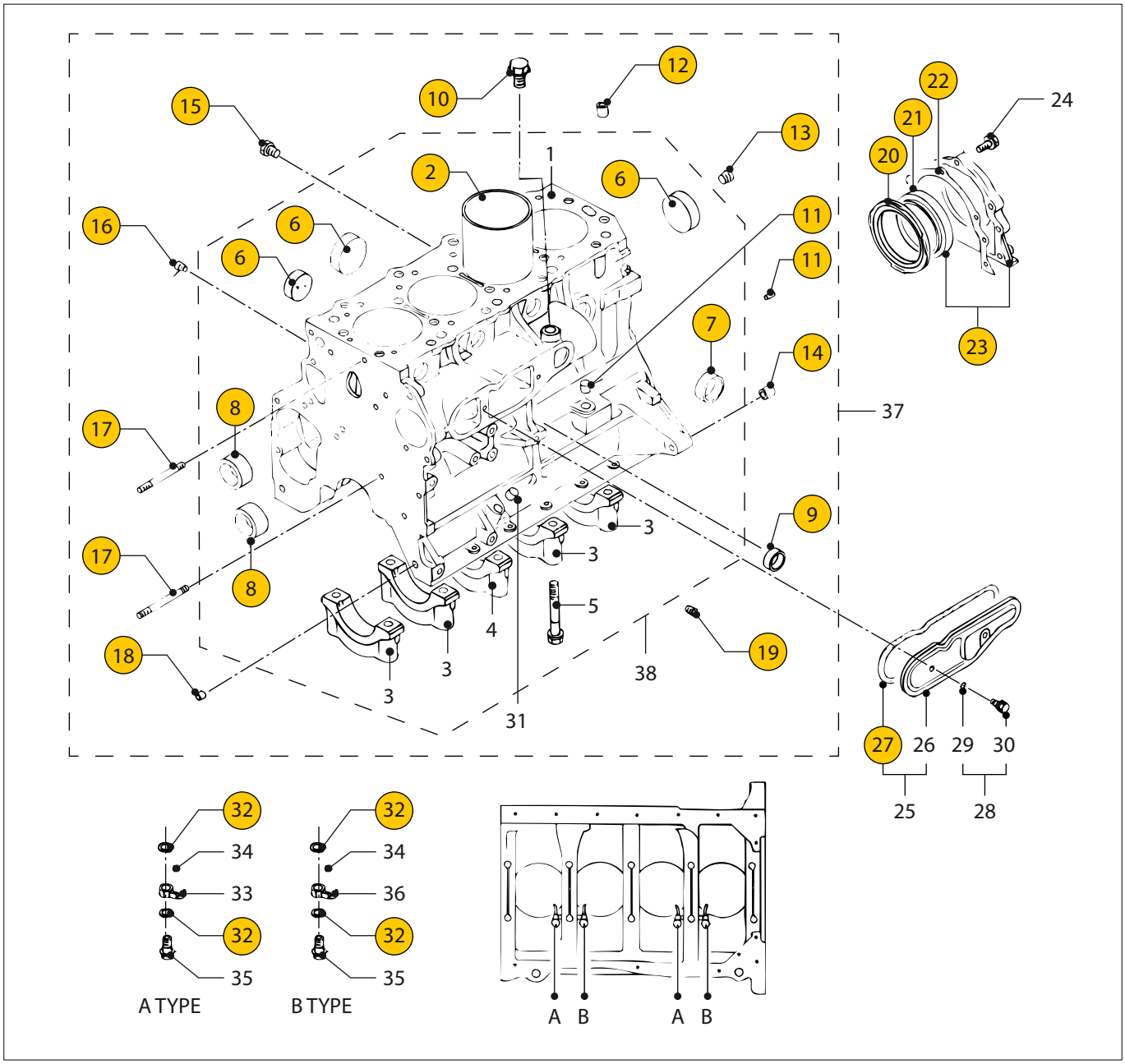

VH4.65 VH4.80 **Cylinderblok** **Cylinder block**

pos.	qty	part	benaming	description
33,34	2	**STM4734**	Jet ass, y-oil	Jet ass, y-oil
34	4	**STM4735**	Pen	Pin
35	4	**STM4736**	Klep	Valve
36	2	**STM4737**	Jet ass, y-oil	Jet ass, y-oil
37	1	**STM4700**	Cylinderblok	Cilinder block
38	1	**STM4701**	Cylinderblok	Cilinder block

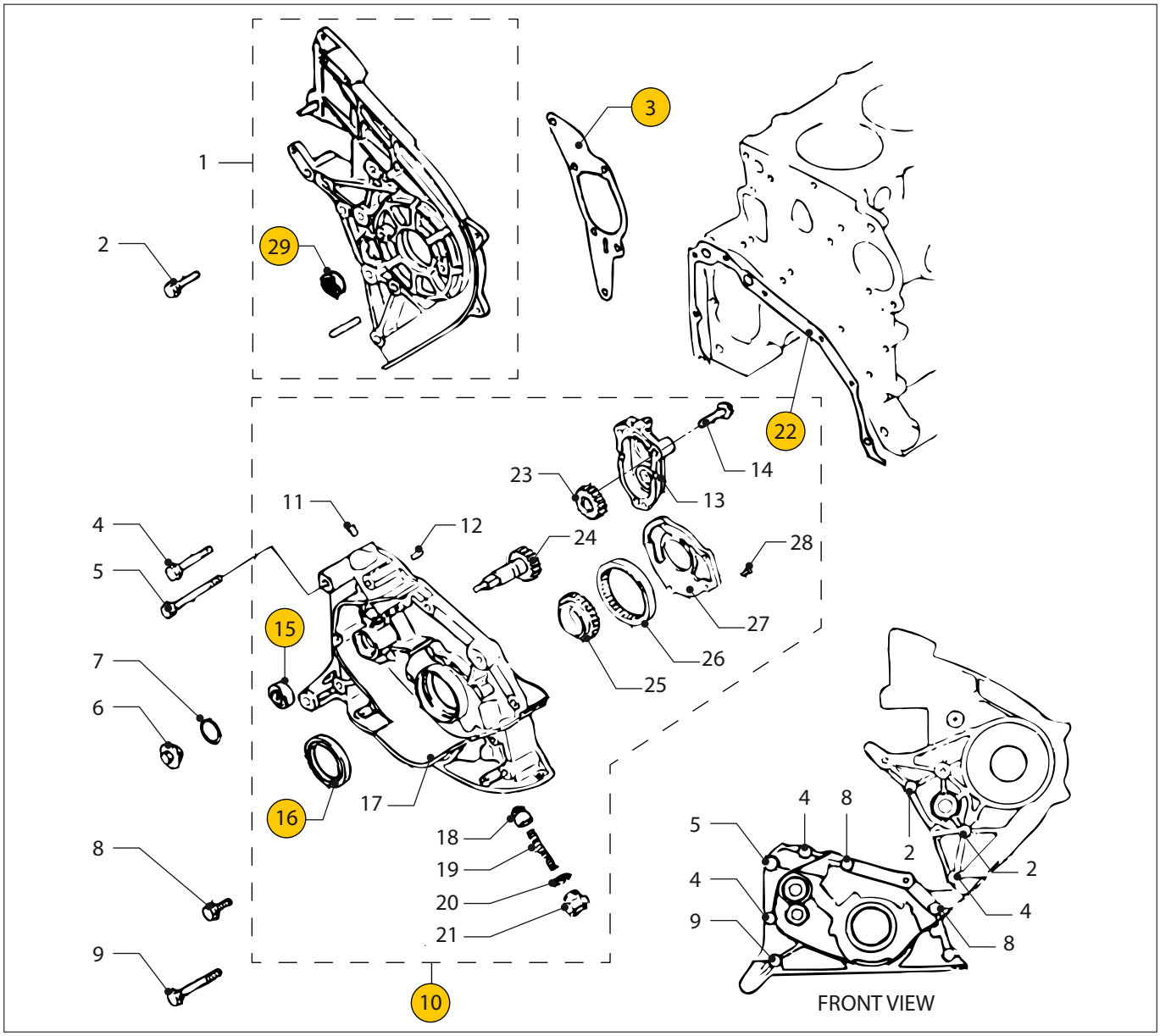

VH4.65 VH4.80 **Distributiedeksel** **Distribution cover**

pos.	qty	part	benaming	description
1	1	**STM4738**	Deksel	Cover
2	2	**STM4739**	Bout 8x35	Bolt 8x35
3	1	**STM4740**	Pakking	Gasket
4	3	**STM4741**	Bout	Bolt
5	1	**STM4742**	Bout	Bolt
6	1	**STM4743**	Plug	Plug
7	1	**STM4744**	O-ring	O-ring
8	2	**STM4745**	Bout	Bolt
9	1	**STM4746**	Bout	Bolt
10	1	**STM4747**	Deksel kompleet	Cover cpl.
11	1	**STM4748**	Plug	Plug
12	2	**STM4749**	Paspen 6 mm	Pin 6 mm
13	1	**STM4750**	Deksel	Cover
14	3	**STM4751**	Bout	Bolt
15	1	**STM4752**	Afdichting	Seal
16	1	**STM4753**	Afdichting	Seal
17	1	**STM4754**	Deksel	Cover
18	1	**STM4755**	Plunjer	Plunger

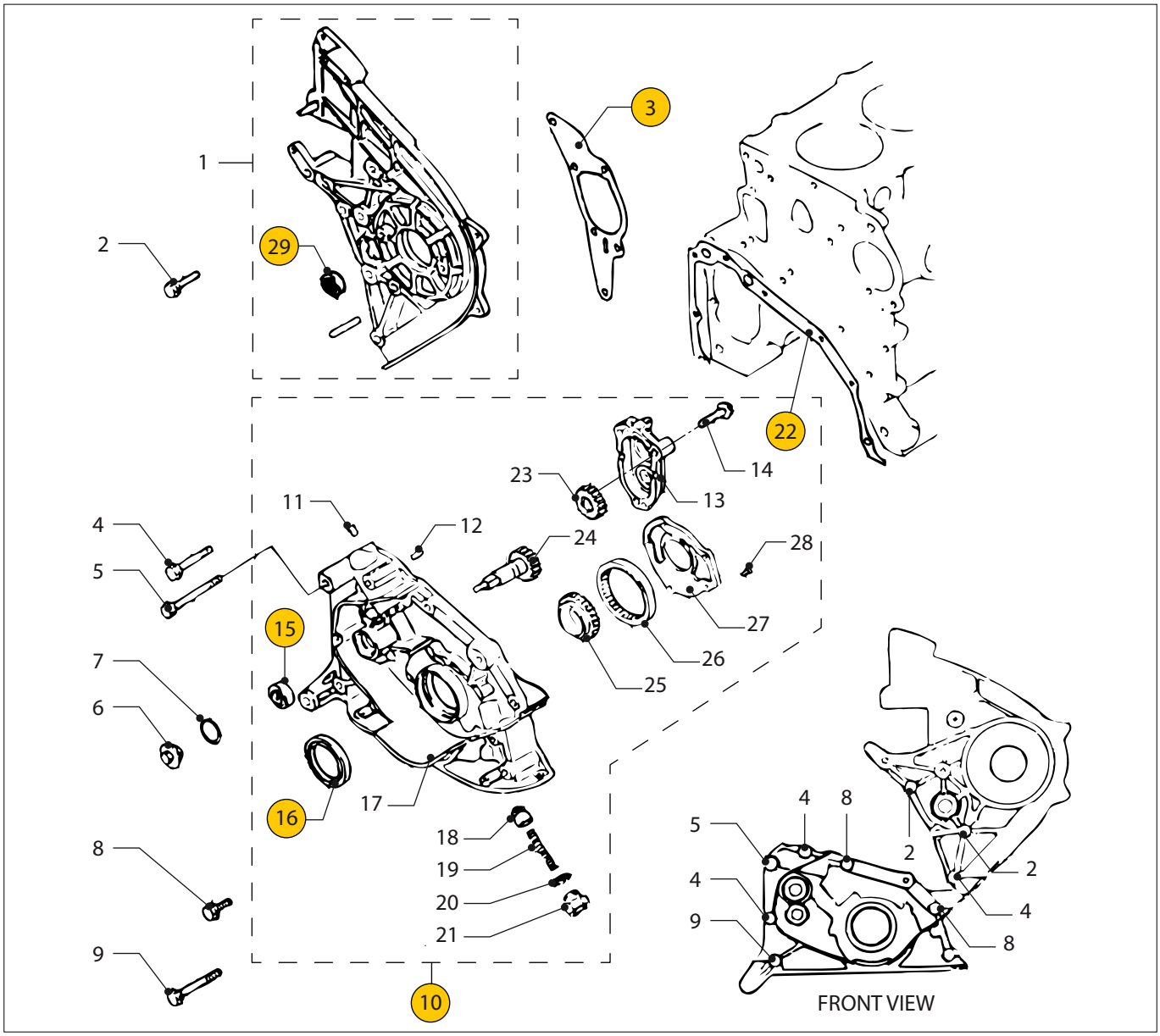

VH4.65 VH4.80 **Distributiedeksel** **Distribution cover**

pos.	qty	part	benaming	description
19	1	**STM4756**	Veer	Spring
20	1	**STM4757**	Pakking	Gasket
21	1	**STM4758**	Plug	Plug
22	1	**STM4759**	Pakking	Gasket
23	1	**STM4760**	Tandwiel	Gearwheel
24	1	**STM4761**	Tandwiel	Gearwheel
25	1	**STM4762**	Tandwiel	Gearwheel
26	1	**STM4763**	Tandwiel	Gearwheel
27	1	**STM4764**	Deksel	Cover
28	6	**STM4765**	Schroef	Screw
29	2	**STM4984**	Afdichting	Seal

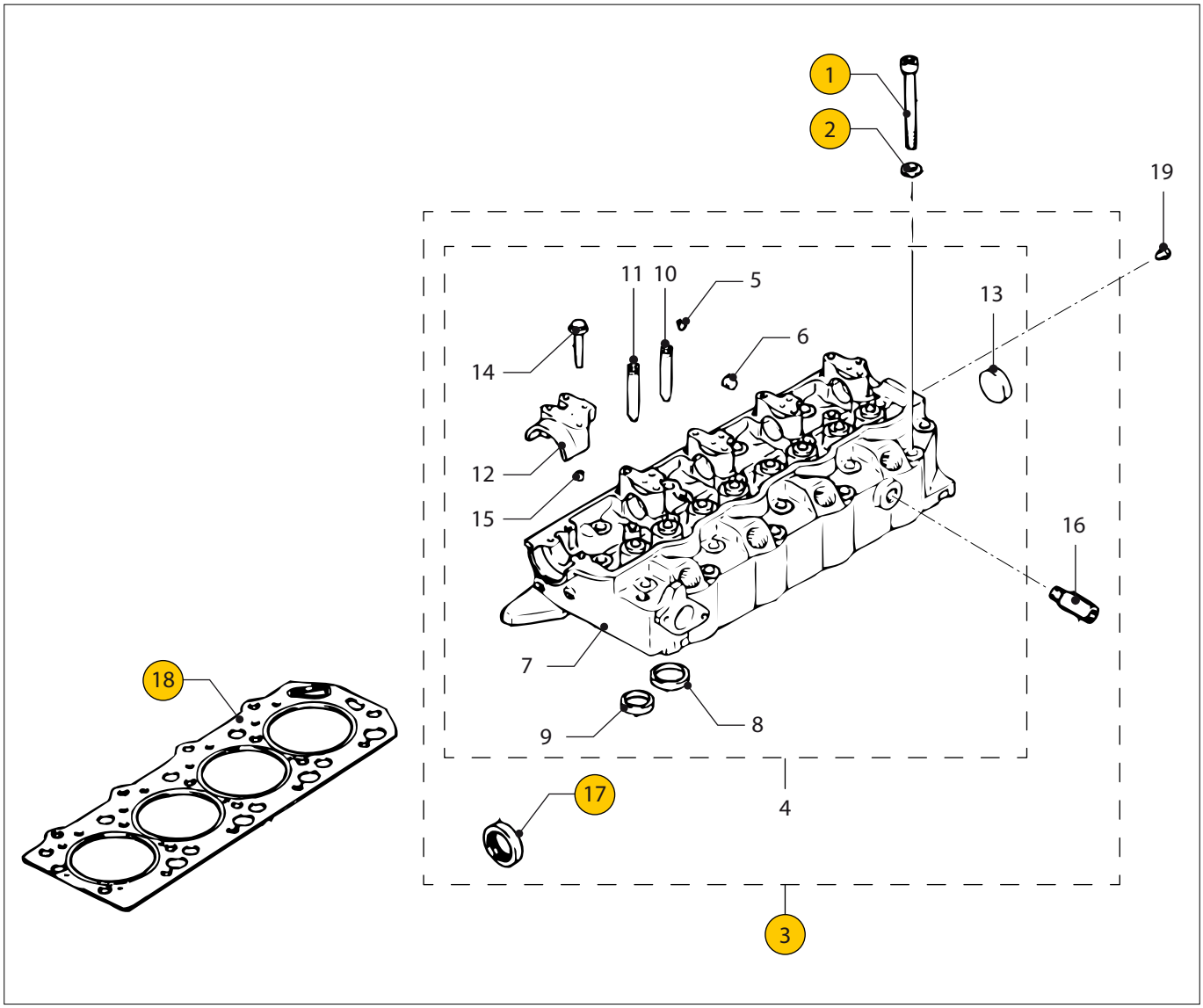

VH4.65 VH4.80 **Cylinderkop** **Cylinder head**

pos.	qty	part	benaming	description
1	18	**STM4766**	Bout	Bolt
2	18	**STM4767**	Ring	Washer
3	1	**STM4768**	Cylinderkop	Cilinder head
4	1	**STM4769**	Cylinderkop	Cilinder head
5	1	**STM4770**	Plug	Plug
6	4	**STM4771**	Plug	Plug
7	1	**STM4772**	Cylinderkop	Cilinder head
8	4	**STM4773**	Klepzitting INLAAT	Valve seat INLET
9	4	**STM4774**	Klepzitting UITLAAT	Valve seat EXHAUST
10	4	**STM4775**	Klepgeleider INLAAT	Valve guide INLET
11	4	**STM4776**	Klepgeleider UITLAAT	Valve guide EXHAUST
12	1	**STM4777**	Steun	Support
13	1	**STM4778**	Afdichtkap	Sealing cap
14	8	**STM4779**	Bout 8x50	Bolt 8x50
15	10	**STM4780**	Bus 8 mm	Bush 8 mm
16	1	**STM4781**	Pijp	Pipe
17	1	**STM4782**	Oliekeerring	Oil seal
18	1	**STM4783**	Koppakking	Cilinder head gasket
19	1	**STM4784**	Plug PT1/16	Plug PT1/16

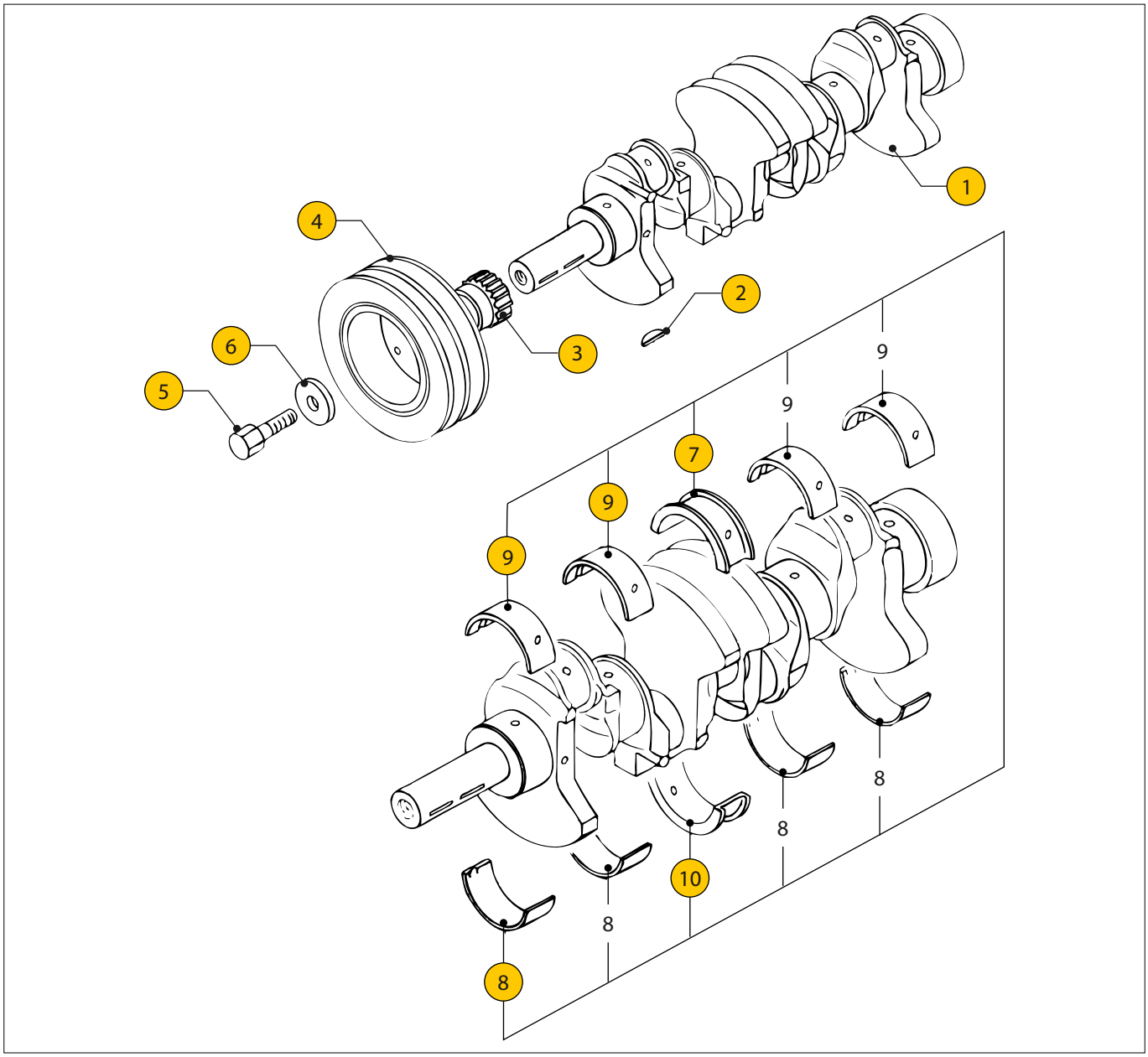

VH4.65 VH4.80 **Krukas** **Crank shaft**

pos.	qty	part	benaming	description
1	1	**STM4785**	Krukas	Crank shaft
2	1	**STM4786**	Spie	Key
3	1	**STM4787**	As	Shaft
4	1	**STM4788**	Demper/snaarschijf	Damper/pulley
5	1	**STM4789**	Bout	Bolt
6	1	**STM4790**	Ring	Washer
7	1	**DM10004**	Lager STD1	Bearing STD1
7	1	**STM4792**	Lager STD2	Bearing STD2
7	1	**STM4793**	Lager STD3	Bearing STD3
7	1	**STM4794**	Lager STD4	Bearing STD4
7	1	**STM4795**	Lager STD5	Bearing STD5
8	1	**DM10004**	Lager STD1	Bearing STD1
8	1	**STM4797**	Lager STD2	Bearing STD2
8	1	**STM4798**	Lager STD3	Bearing STD3
8	1	**STM4799**	Lager STD4	Bearing STD4
8	1	**STM4800**	Lager STD5	Bearing STD5

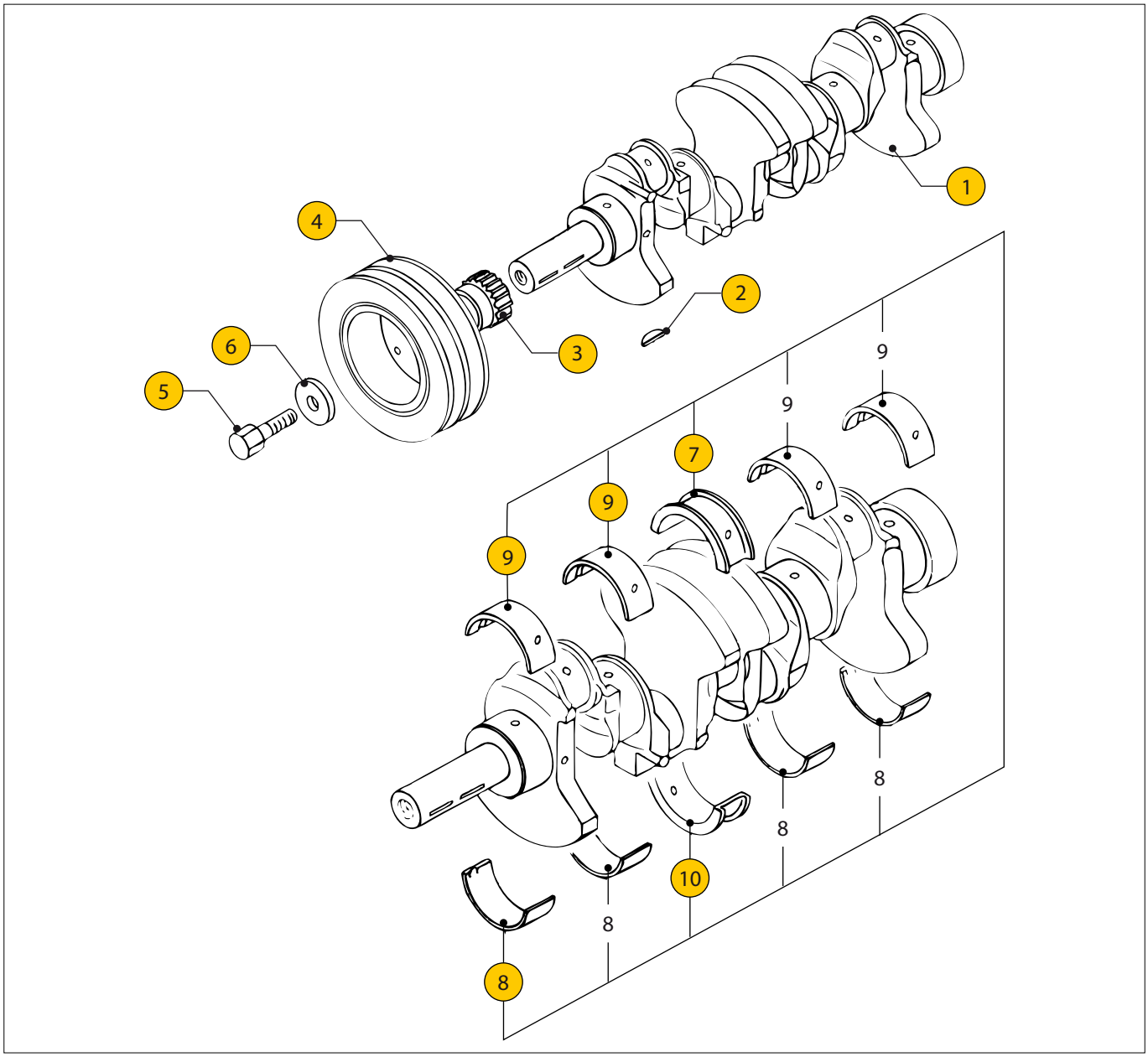

VH4.65 VH4.80 **Krukas** **Crank shaft**

pos.	qty	part	benaming	description
9	1	**DM10004**	Lager STD1	Bearing STD1
9	1	**STM4802**	Lager STD2	Bearing STD2
9	1	**STM4803**	Lager STD3	Bearing STD3
9	1	**STM4804**	Lager STD4	Bearing STD4
9	1	**STM4805**	Lager STD5	Bearing STD5
10	1	**DM10004**	Lager STD1	Bearing STD1
10	1	**STM4807**	Lager STD2	Bearing STD2
10	1	**STM4808**	Lager STD3	Bearing STD3
10	1	**STM4809**	Lager STD4	Bearing STD4
10	1	**STM4810**	Lager STD5	Bearing STD5

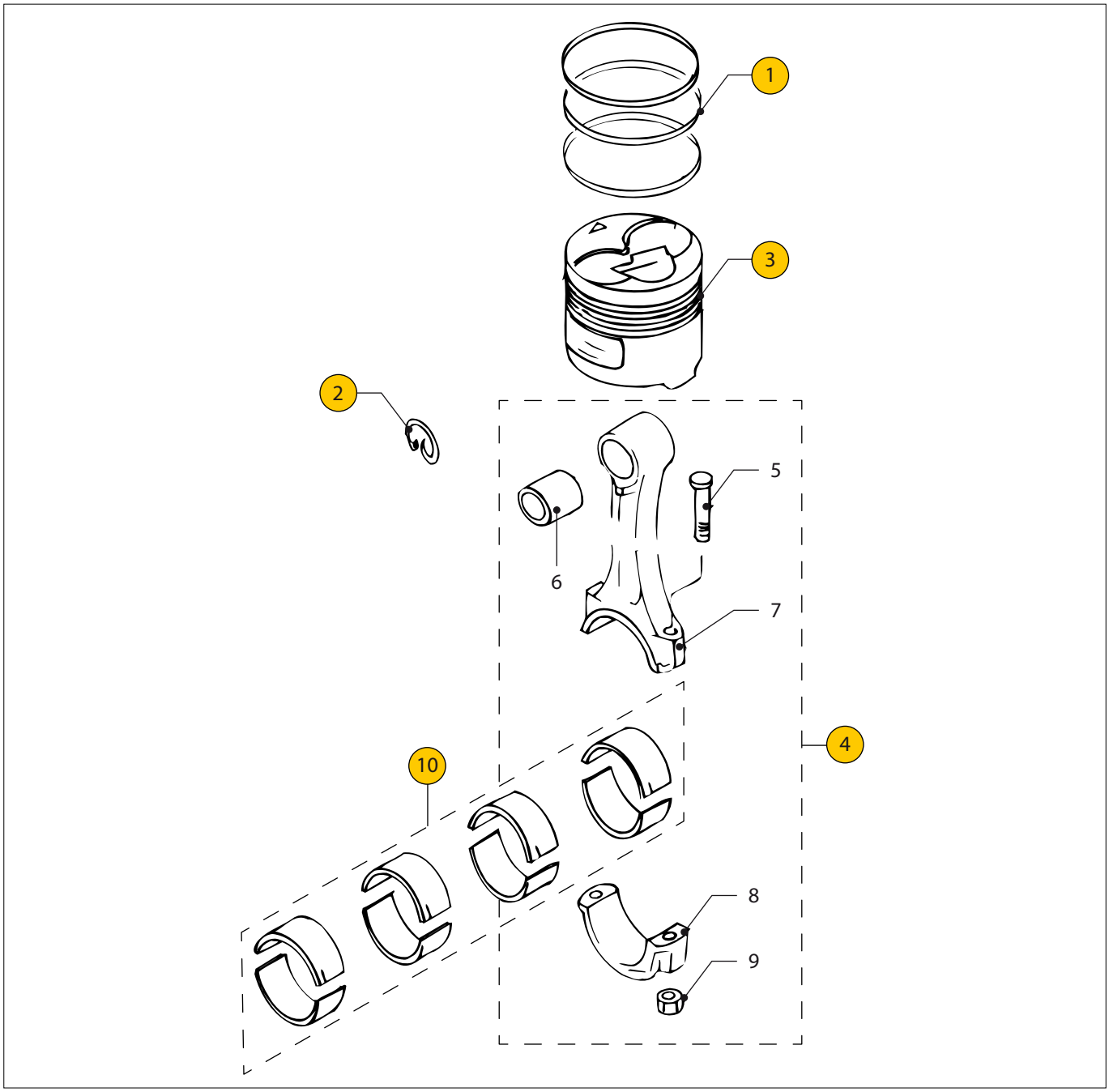

VH4.65 VH4.80 **Zuiger + drijfstang** **Piston + connection rod**

pos.	qty	part	benaming	description
1	1	**STM4811**	Set zuigerveren STD voor 1 zuiger	Ring set piston STD for 1 piston
2	8	**STM4831**	Borgveer	Circlip
3	4	**STM4832**	Zuiger + pen STD A	Piston + pin STD A
4	4	**STM4835**	Drijfstang	Connection rod
5	2	**STM4836**	Bout	Bolt
6	1	**STM4837**	Pen	Pin
7	1	**STM4838**	Drijfstang	Connection rod
8	1	**STM4839**	Kap	Cap
9	2	**STM4840**	Moer	Nut
10	8	**STM4841**	Lager STD G	Bearing STD G

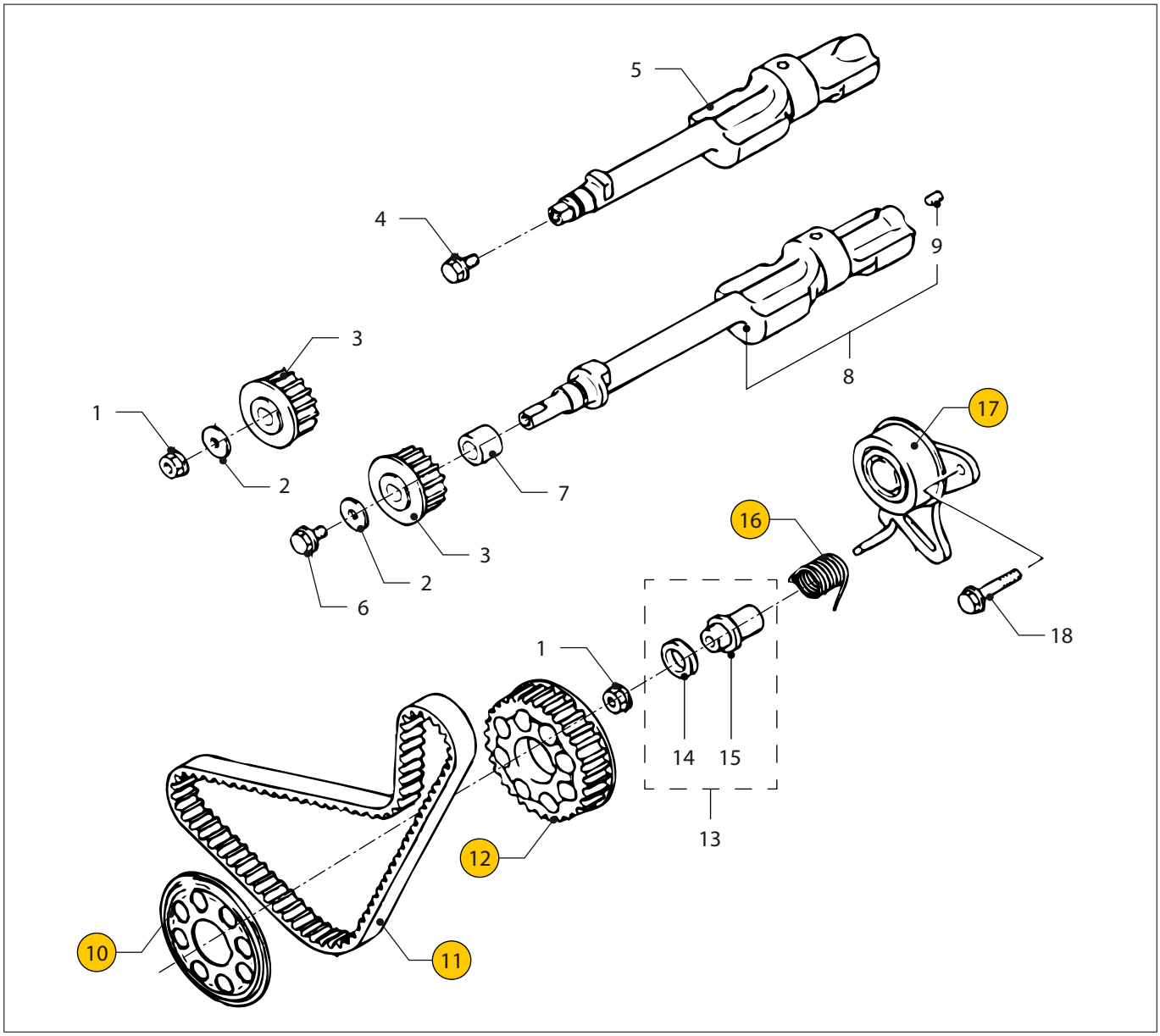

VH4.65 VH4.80 **Balansas** **Balanger shaft**

pos.	qty	part	benaming	description
1	2	**STM4842**	Moer	Nut
2	2	**STM4843**	Ring	Washer
3	2	**STM4844**	Tandwiel	Gearwheel
4	1	**STM4845**	Bout	Bolt
5	1	**STM4846**	Balansas rechts	Balanger shaft right
6	1	**STM4847**	Bout	Bolt
7	1	**STM4748**	Bus	Bush
8	1	**STM4849**	Balansas links	Balanger shaft left
9	1	**STM4850**	Plug	Plug
10	1	**STM4851**	Flens	Flange
11	1	**STM4852**	Riem	Belt
12	1	**STM4853**	Tandwiel	Gearwheel
13	1	**STM4854**	Pakking + afstandbus	Gasket + spacer
14	1	**STM4855**	Pakking	Gasket
15	1	**STM4856**	Afstandbus	Spacer
16	1	**STM4857**	Veer	Spring
17	1	**STM4858**	Spanner	Tensioner
18	1	**STM4859**	Bout 8x16-10T	Bolt 8x16-10T

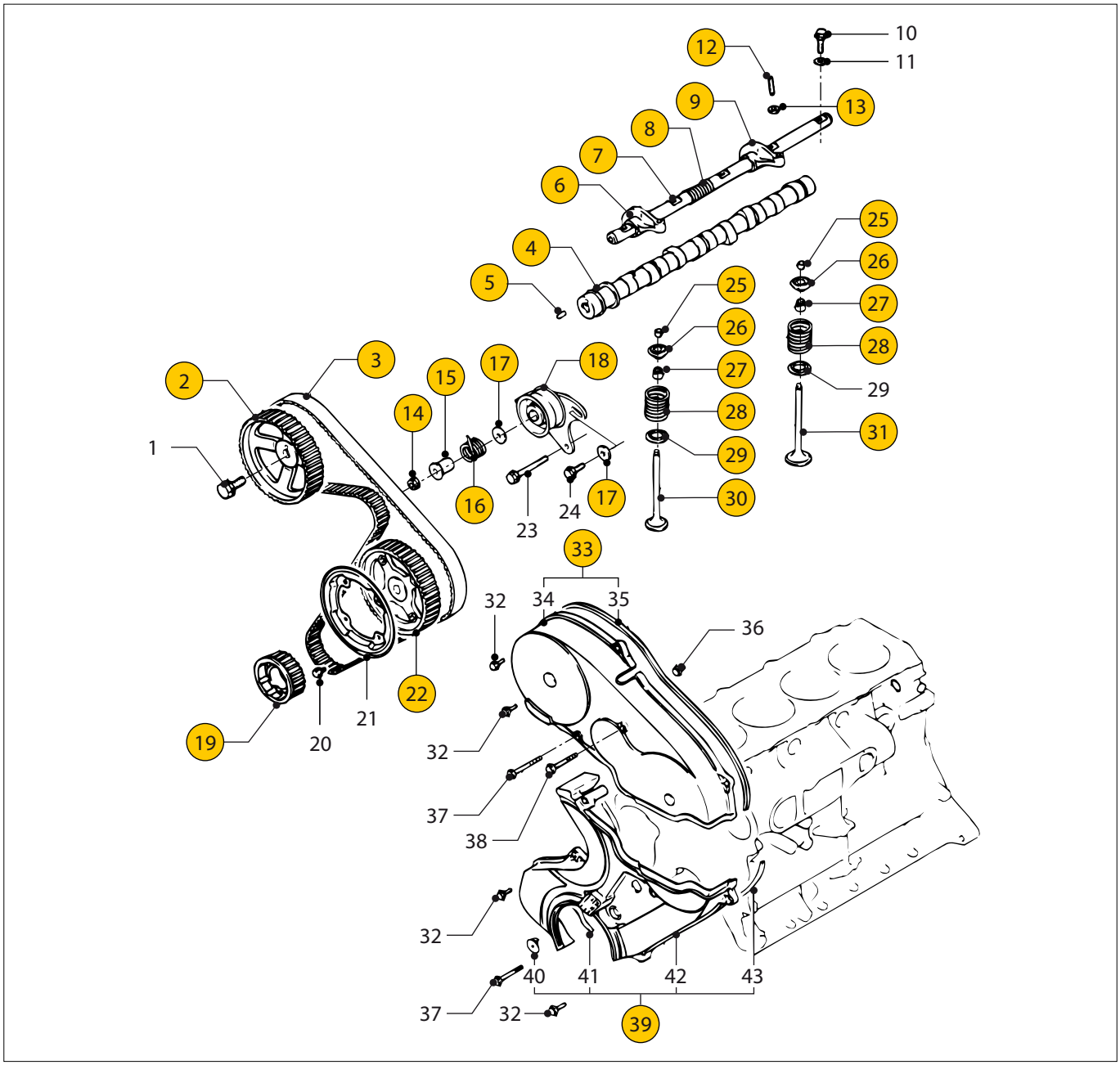

VH4.65 VH4.80 **Nokkenas** **Camshaft**

pos.	qty	part	benaming	description
1	1	**STM4860**	Bout	Bolt
2	1	**STM4861**	Tandwiel	Gearwheel
3	1	**STM4862**	Riem	Belt
4	1	**STM4863**	Nokkenas	Camshaft
5	1	**STM4864**	Pen	Pin
6	4	**STM4865**	Tuimelaar inlaat	Rocker arm inlet
7	1	**STM4866**	Tuimelaaras	Rocker shaft
8	4	**STM4867**	Veer	Spring
9	4	**STM4868**	Tuimelaar uitlaat	Rocker arm exhaust
10	1	**STM4869**	Bout	Bolt
11	1	**STM4870**	Ring	Washer
12	8	**STM4871**	Stelschroef	Adj.screw
13	8	**STM4872**	Moer	Nut
14	1	**STM4873**	Moer	Nut
15	1	**STM4874**	Afstandbus	Spacer
16	1	**STM4875**	Veer	Spring

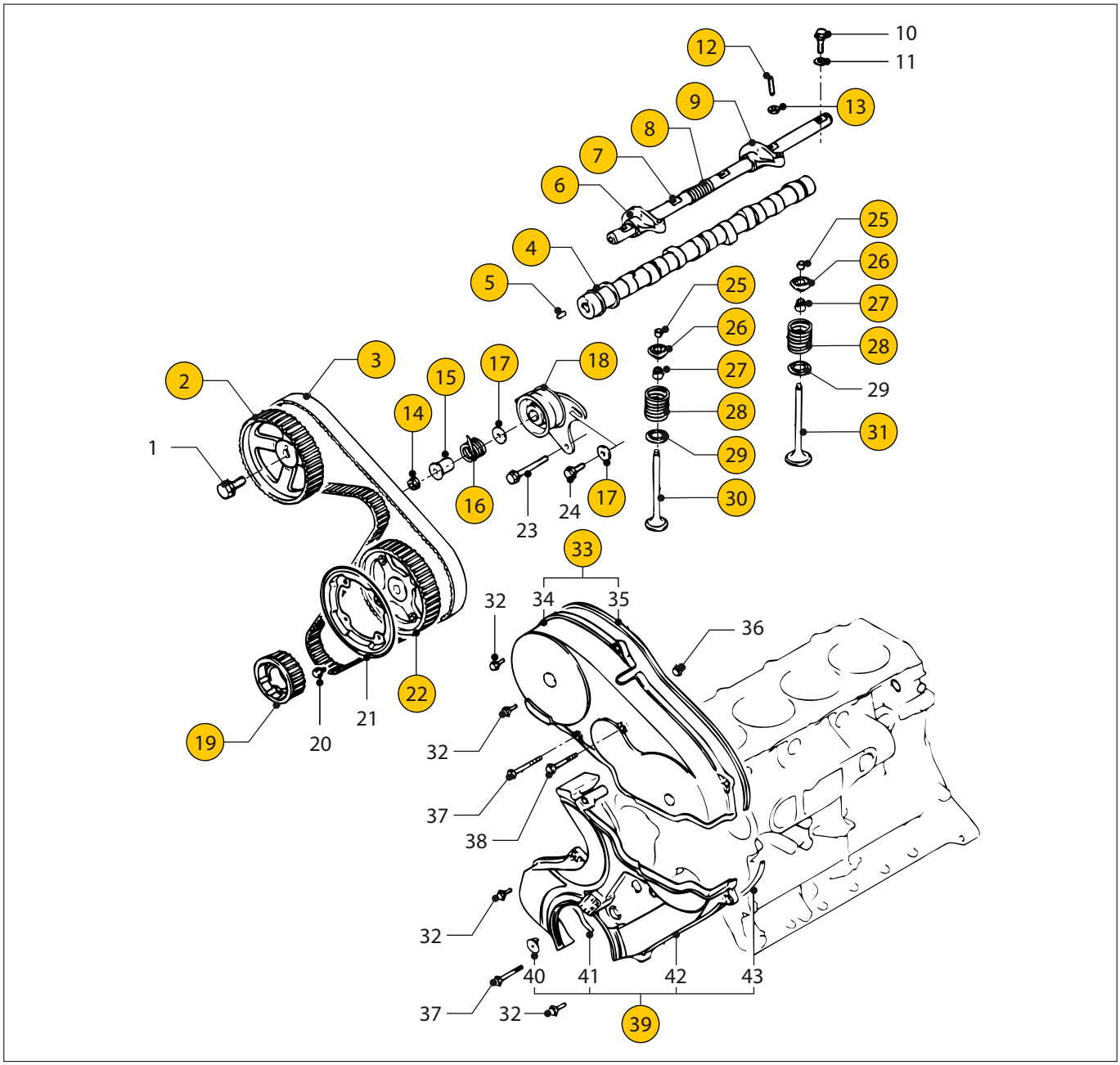

VH4.65 VH4.80 **Nokkenas** **Camshaft**

pos.	qty	part	benaming	description
17	2	**STM4876**	Ring	Washer
18	1	**STM4877**	Spanner	Tensioner
19	1	**STM4878**	Tandwiel	Gearwheel
20	4	**STM4879**	Bout 8x12	Bolt 8x12
21	1	**STM4880**	Flens	Flange
22	1	**STM4881**	Tandwiel	Gearwheel
23	1	**STM4882**	Bout	Bolt
24	1	**STM4883**	Bout	Bolt
25	16	**STM4884**	Borging	Lock
26	8	**STM4885**	Geleiding	Guide
27	8	**STM4886**	Afdichting	Seal
28	8	**STM4887**	Veer	Spring
29	8	**STM4888**	Zitting	Seat
30	4	**STM4889**	Klep inlaat	Valve inlet
31	4	**STM4890**	Klep uitlaat	Valve exhaust
32	7	**STM4891**	Bout 6x22	Bolt 6x22

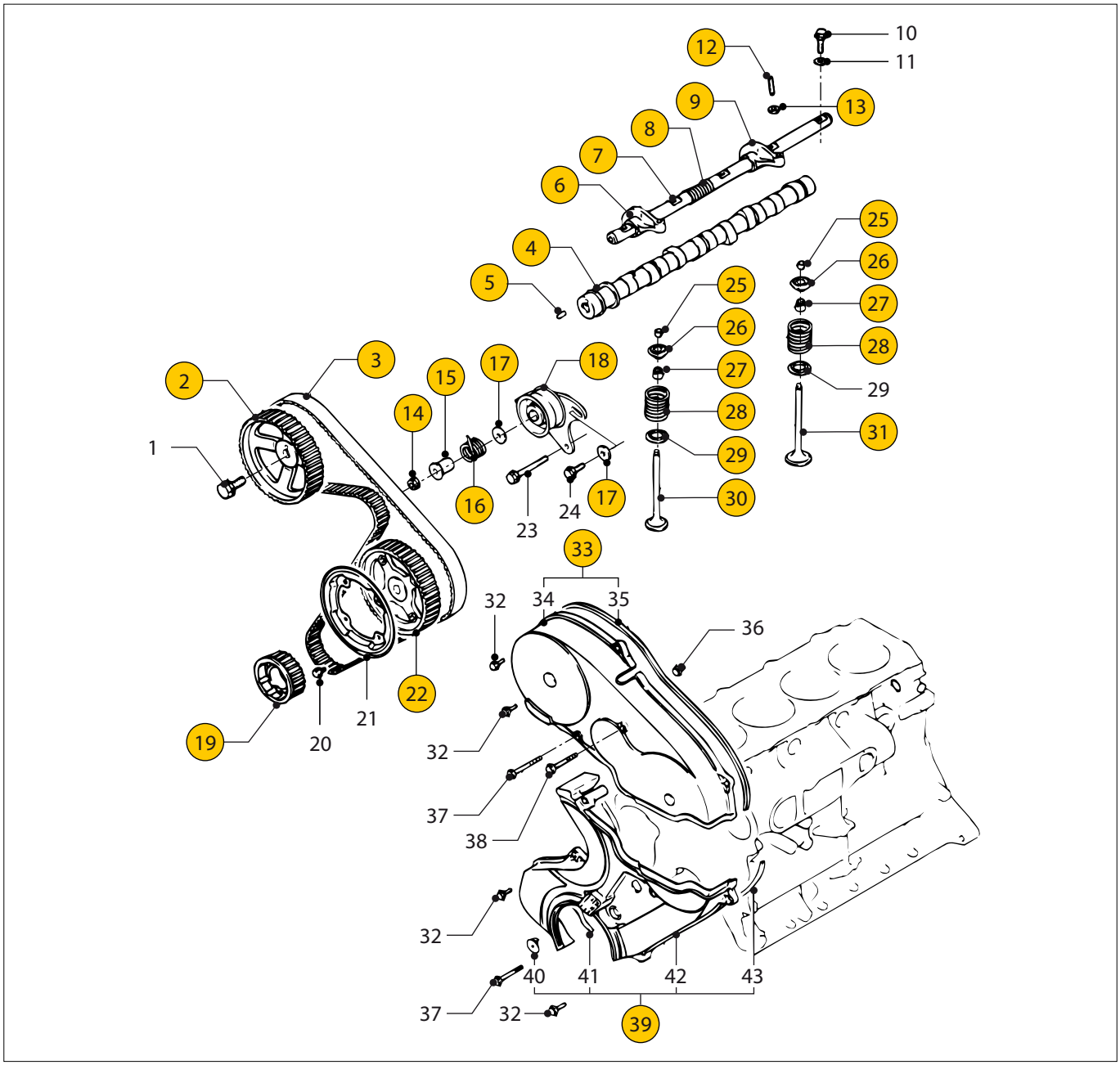

VH4.65 VH4.80 **Nokkenas** **Camshaft**

pos.	qty	part	benaming	description
33	1	**STM4892**	Deksel + pakking	Cover + gasket
34	1	**STM4893**	Deksel	Cover
35	1	**STM4894**	Pakking	Gasket
36	1	**STM4895**	Bout 6x12	Bolt 6x12
37	2	**STM4896**	Bout	Bolt
38	1	**STM4897**	Bout	Bolt
39	1	**STM4898**	Deksel cpl.	Cover cpl.
40	1	**STM4899**	Afdichting	Plug
41	1	**STM4900**	Pakking	Gasket
42	1	**STM4901**	Deksel	Cover
43	1	**STM4902**	Pakking	Gasket

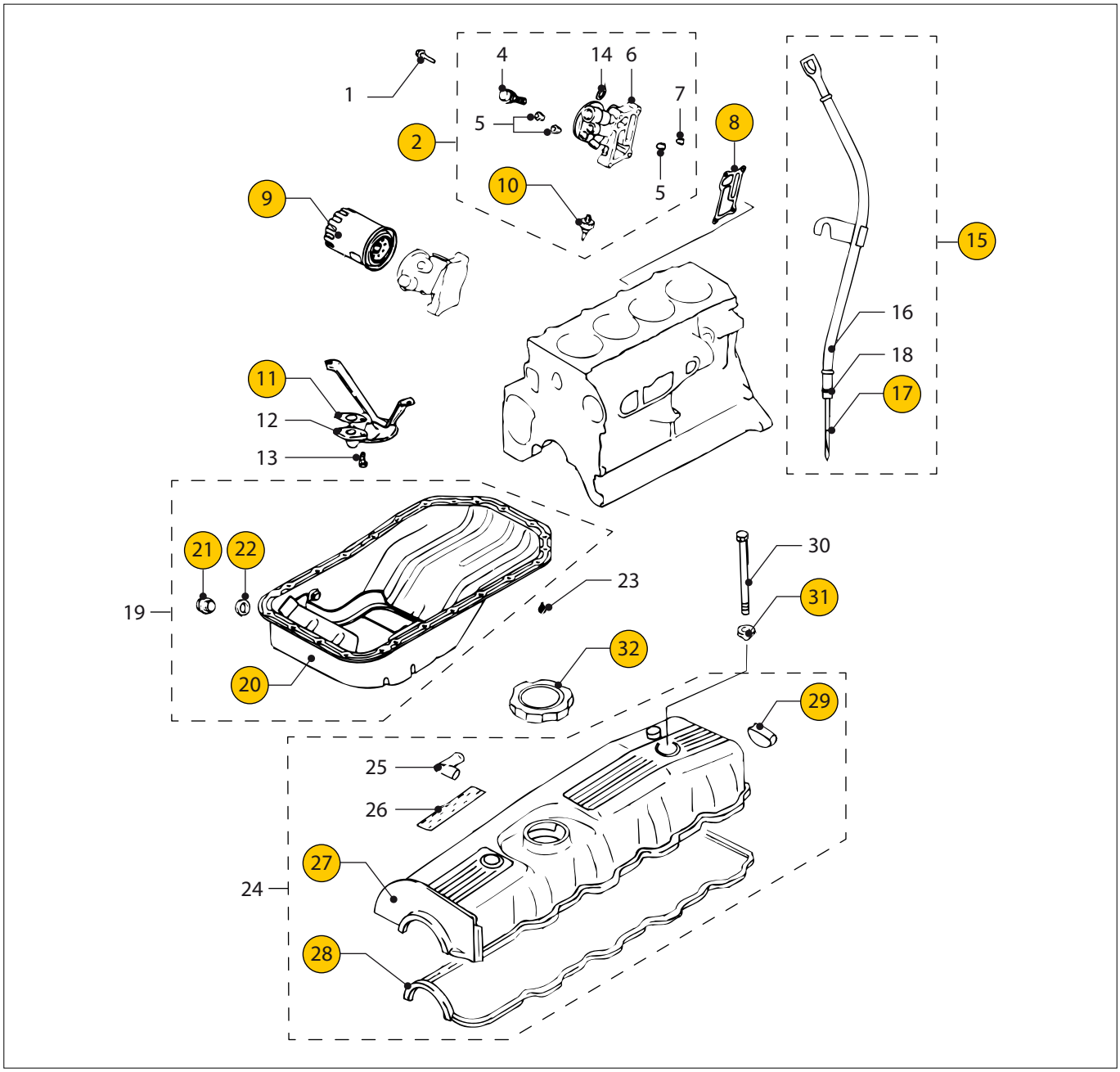

VH4.65 VH4.80 **Carterpan + kleppendeksel** **Oil pan + rocker cover**

pos.	qty	part	benaming	description
1	4	**STM4903**	Bout	Bolt
2	1	**STM4904**	Oliefilterhuis cpl.	Oilfilter case cpl.
4	1	**STM4905**	Thermostaat by-pass	Thermostat by-pass
5	2	**STM4906**	Plug PT3/8	Plug PT3/8
6	1	**STM4907**	Oliefilterhuis	Oilfilter case
7	1	**STM4908**	Plug PT1/4	Plug PT1/4
8	1	**STM4909**	Pakking	Gasket
9	1	**STM4910**	Oliefilter	Oilfilter
10	1	**STM6267**	Oliedrukschakelaar (Hyundai)	Oil pressure switch (Hyundai)
11	1	**STM4912**	Pakking	Gasket
12	1	**STM4913**	Olie aanzuigpijp	Oil suction pipe
13	4	**STM4914**	Bout	Bolt
14	1	**STM4915**	Gasket	Gasket
15	1	**STM4916**	Pijlstok cpl.	Dipstick cpl.
16	1	**STM4917**	Pijp	Pipe
17	1	**STM4918**	Pijlstok	Dipstick

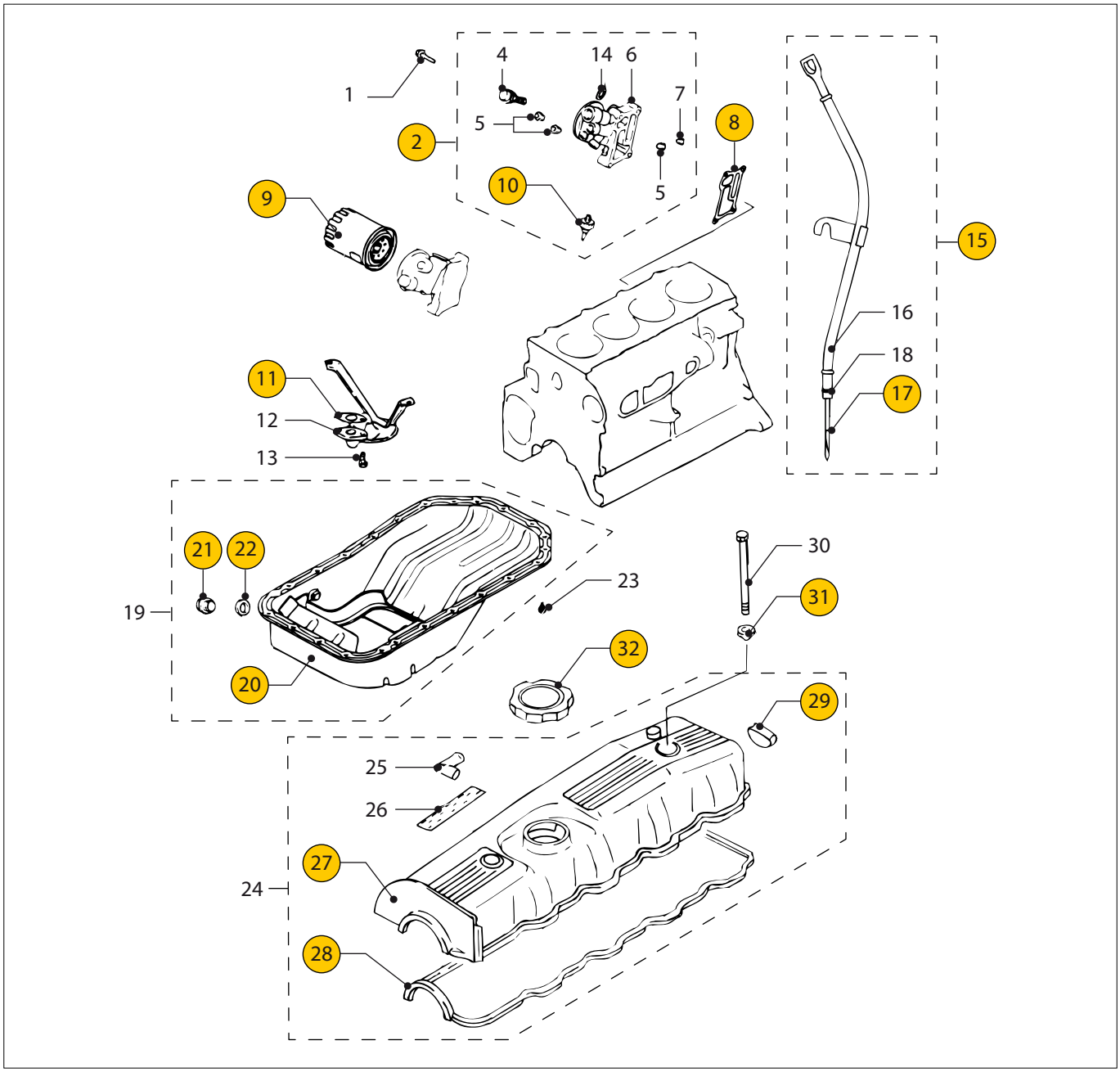

VH4.65 VH4.80 **Carterpan + kleppendeksel** **Oil pan + rocker cover**

pos.	qty	part	benaming	description
18	1	**STM4919**	O-ring	O-ring
19	1	**STM4920**	Carterpan cpl.	Oil pan cpl.
20	1	**STM4921**	Carterpan	Oil pan
21	1	**STM4922**	Plug	Plug
22	1	**STM4923**	Afdichtring	Seal washer
23	24	**STM4924**	Bout	Bolt
24	1	**STM4925**	Kleppendeksel cpl.	Rocker cover cpl.
25	1	**STM4926**	Pijp	Pipe
26	1	**STM4927**	Typeplaatje	Model plate
27	1	**STM4928**	Kleppendeksel	Rocker cover
28	1	**STM4929**	Pakking	Gasket
29	1	**STM4930**	Afdichting	Seal
30	2	**STM4931**	Bout	Bolt
31	2	**STM4932**	Afdichting	Seal
32	1	**STM4933**	Dop	Cover

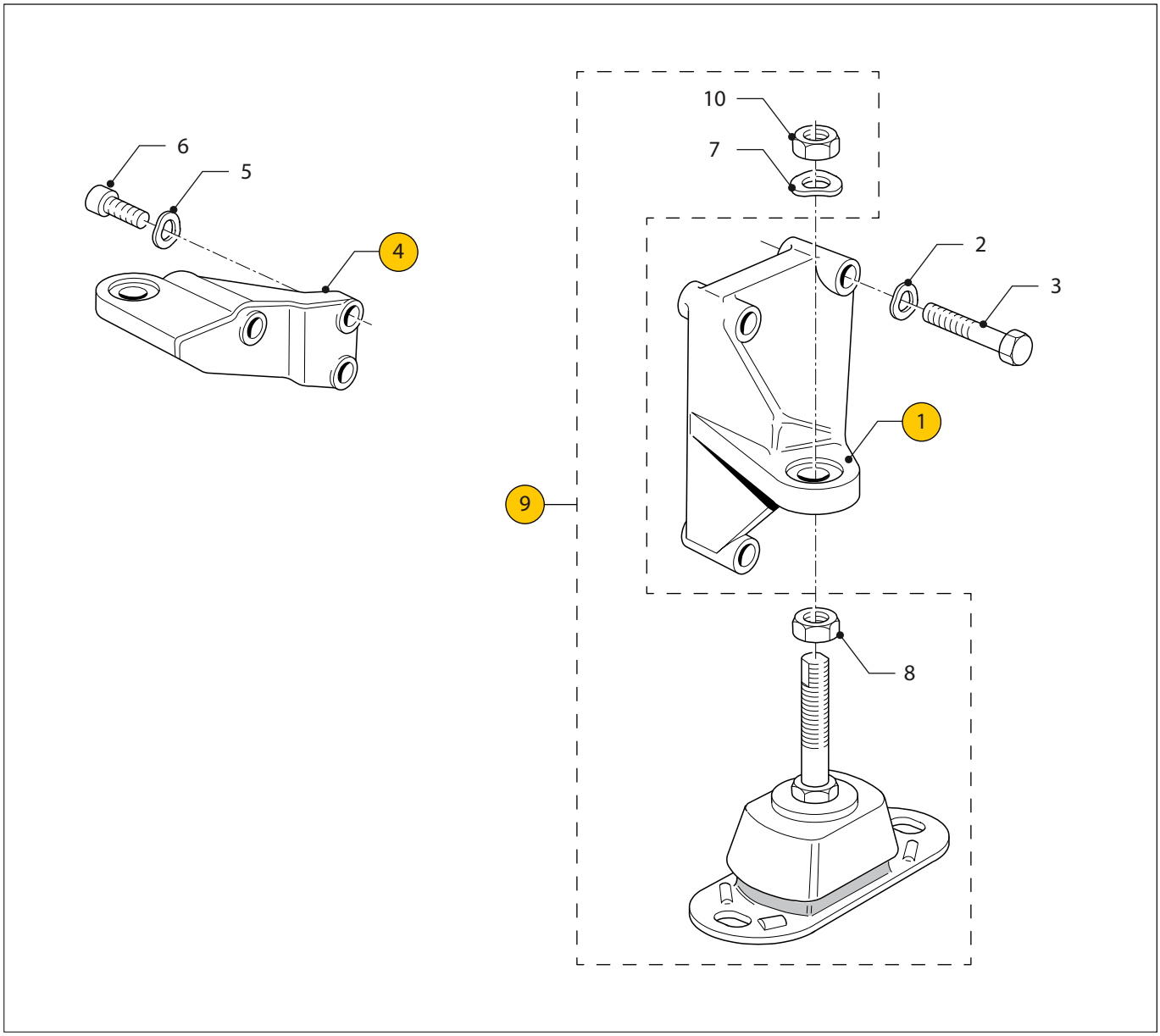

VH4.65 VH4.80 **Motorsteunen** **Engine supports**

pos.	qty	part	benaming	description
1	1	**STM4681**	Voorsteun BB	Engine support PS
2	3	**STM4061**	Gegolfde veerring M10	Wave spring washer M10
3	3	**STM4684**	Bout M10x1,25x60	Bolt M10x1,25x60
4	1	**STM4682**	Voorsteun SB	Engine support SB
5	3	**STM4061**	Gegolfde veerring M10	Wave spring washer M10
6	3	**STM4683**	Inbusbout M10x1,25x30	Allen screw M10x1,25x30
7	1	**STM4011**	Gegolfde veerring M16	Wave spring washer M16
8	1	**STM4641**	Moer M16x1,5	Nut M16x1,5
9	2	**HY100**	Trillingdemper HY100	Engine mount HY100
10	1	**STM4641**	Moer M16x1,5	Nut M16x1,5

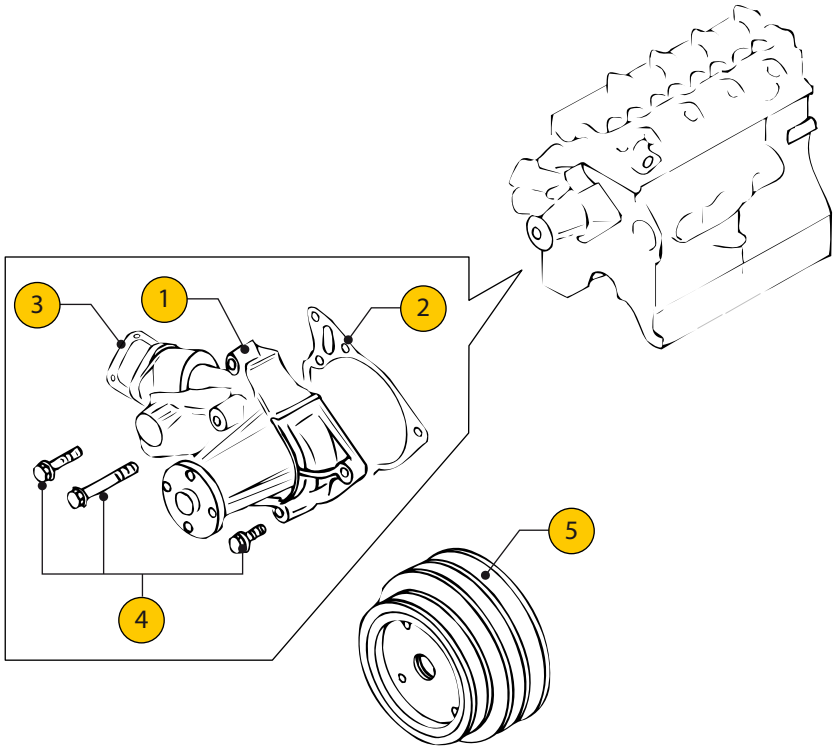

VH4.65 VH4.80 **Circulatiepomp** **Circulation pump**

pos.	qty	part	benaming	description
1	1	**STM4934**	Circulatiepomp cpl.	Circulation pump cpl.
2	1	**STM4935**	Pakking	Gasket
3	4	**STM4936**	Pakking	Gasket
4	1	**VP000380**	Set bouten	Set bolts
5	1	**STM4939**	Snaarschijf	Pulley

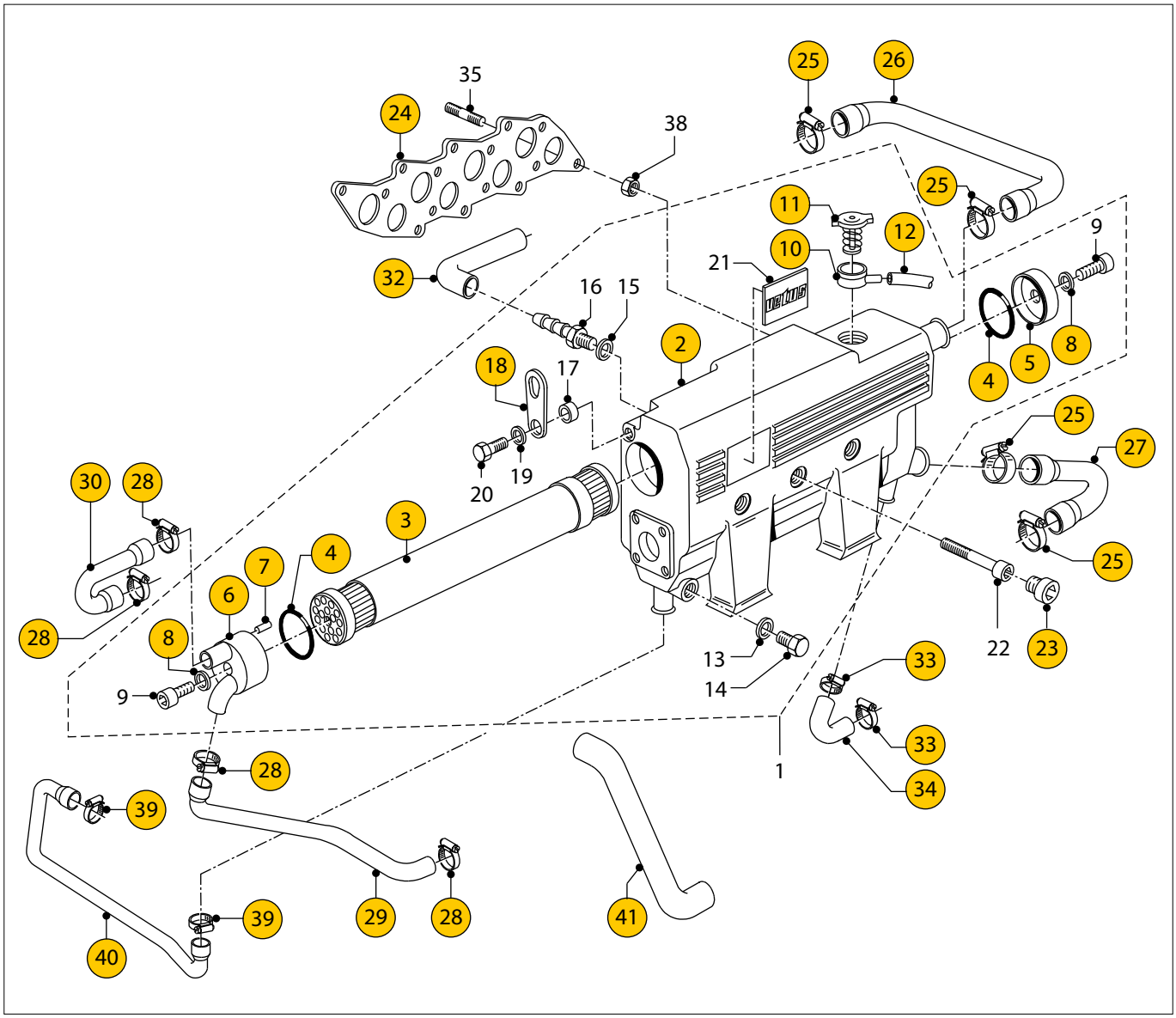

VH4.65 VH4.80 **Warmtewisselaar unit (<- 03-03)** **Heatexchanger unit (<- 03-03)**

pos.	qty	part	benaming	description
1	1	**STM4506**	Warmtewisselaar kompleet	Heatexchanger cpl.
2	1	**STM4504**	Warmtewisselaarhuis	Heatexchanger housing
3	1	**STM4505**	Pijpenbundel	Tube stack
4	2	**STM6113**	O-ring 61x2,5	O-ring 61x2,5
5	1	**STM7446**	Omkeerdeksel	Cover
6	1	**STM6503**	Aansluitdeksel	Cover
7	1	**STM6130**	Spanbus	Busch
8	2	**08-01108**	Afdichtring	Seal washer
9	2	**STM1006**	Inbusbout M8x30	Allen screw M8x30
10	1	**18-14649**	Vulnek	Filler neck
11	1	**18-14715**	Vuldop 0,5 Bar	Filler cap 0,5 bar
12	1	**FUHOSE13**	Slang	Hose
13	1	**STM1062**	Afdichtring	Seal washer
14	1	**STM1059**	Afdichtplug M14x1,5	Plug M14x1,5
15	1	**STM9024**	Afdichtring	Seal washer
16	1	**STM4516**	Slangpilaar G1/4-15mm	Hose pillar G1/4-15mm
17	1	**CT30059**	Ring d=4	Washer d=4
18	1	**STM4518**	Hijsoog	Lifting eye
19	1	**STM1056**	Veerring M8	Spring washer M8

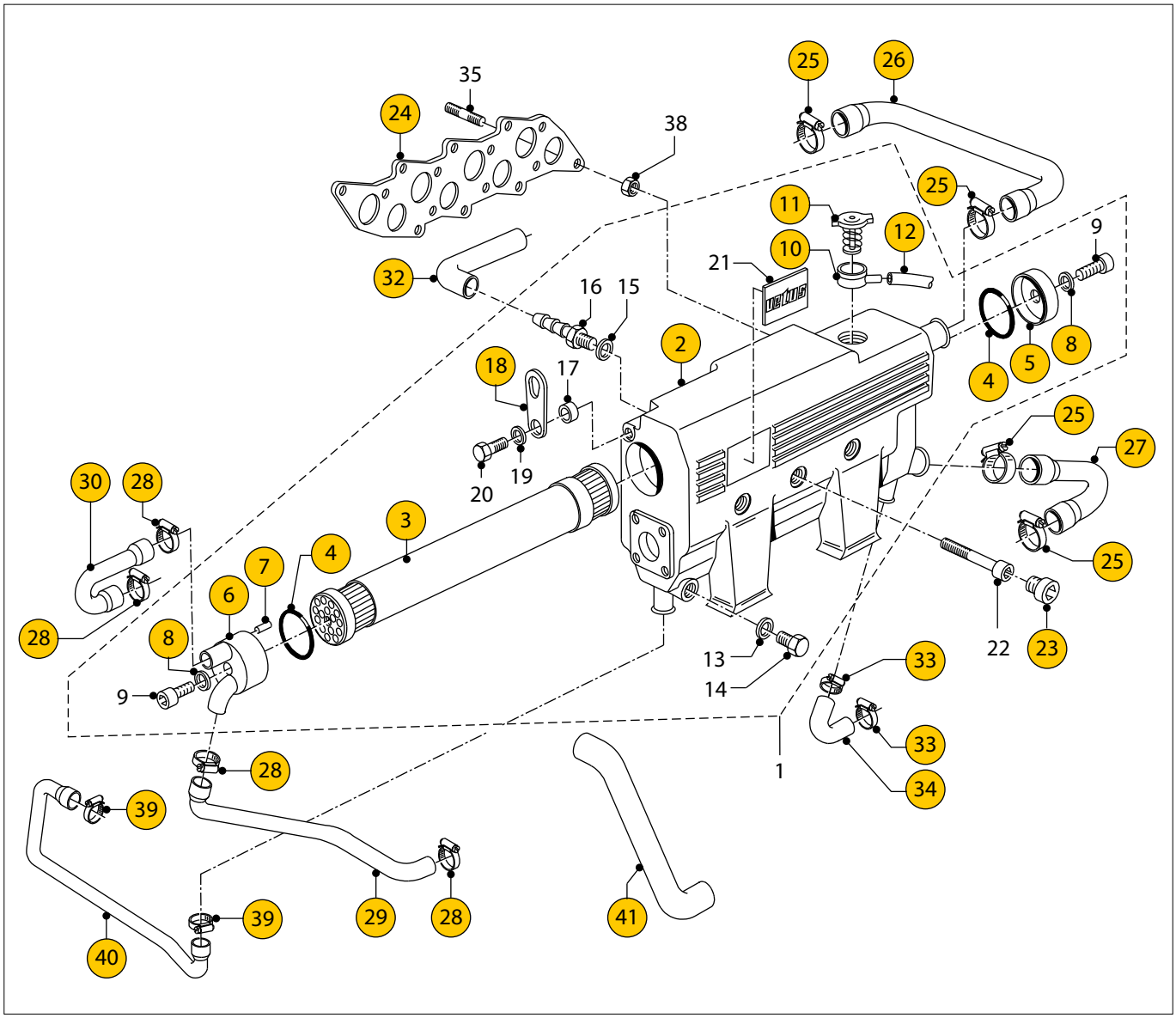

VH4.65 VH4.80 **Warmtewisselaar unit (<- 03-03)** **Heatexchanger unit (<- 03-03)**

pos.	qty	part	benaming	description
20	1	**STM1610**	Bout M8x25	Bolt M8x25
21	1	**STM6531**	Logo plaatje	Type plate
22	4	**STM4517**	Inbusbout lage kop M8x100	Allen screw low head M8x100
23	3	**STM4503**	Plug M20x1,5	Plug M20x1,5
24	1	**STM4980**	Pakking	Gasket
25	4	**STM3005**	Slangklem 32-44	Hose clamp 32-44
26	1	**STM4621**	Slang cylinderkop naar ww	Hose cyl. head to heat exchanger
27	1	**STM4622**	Slang van ww naar thermostaat	Hose from heatex. to thermostat housing
28	4	**STM3005**	Slangklem 32-44	Hose clamp 32-44
29	1	**STM4627**	Slang van oliekoeler naar ww	Hose from oilcooler to heatex.
30	1	**STM4625**	Slang van ww naar injectiebocht	Hose from heatex. to inj. elbow
32	1	**STM4620**	Slang carterontluchting	Hose crankcase bleeding
33	2	**STM2012**	Slangklem 19-28	Hose clamp 19-28
34	1	**STM4624**	Slang by-pass/ ww uit	Hose by-pass/heatex. out
35	4	**STM9744**	Tapeind M8x25	Stud M8x25
38	4	**STM4536**	Moer M8	Nut M8
39	2	**STM2012**	Slangklem 19-28	Hose clamp 19-28
40	1	**STM4623**	Slang by-pass/ ww in	Hose by-pass/heatex. in
41	1	**STM4630**	Slang van motoroliekoeler naar kk oliekoeler	Hose from cooler to cooler

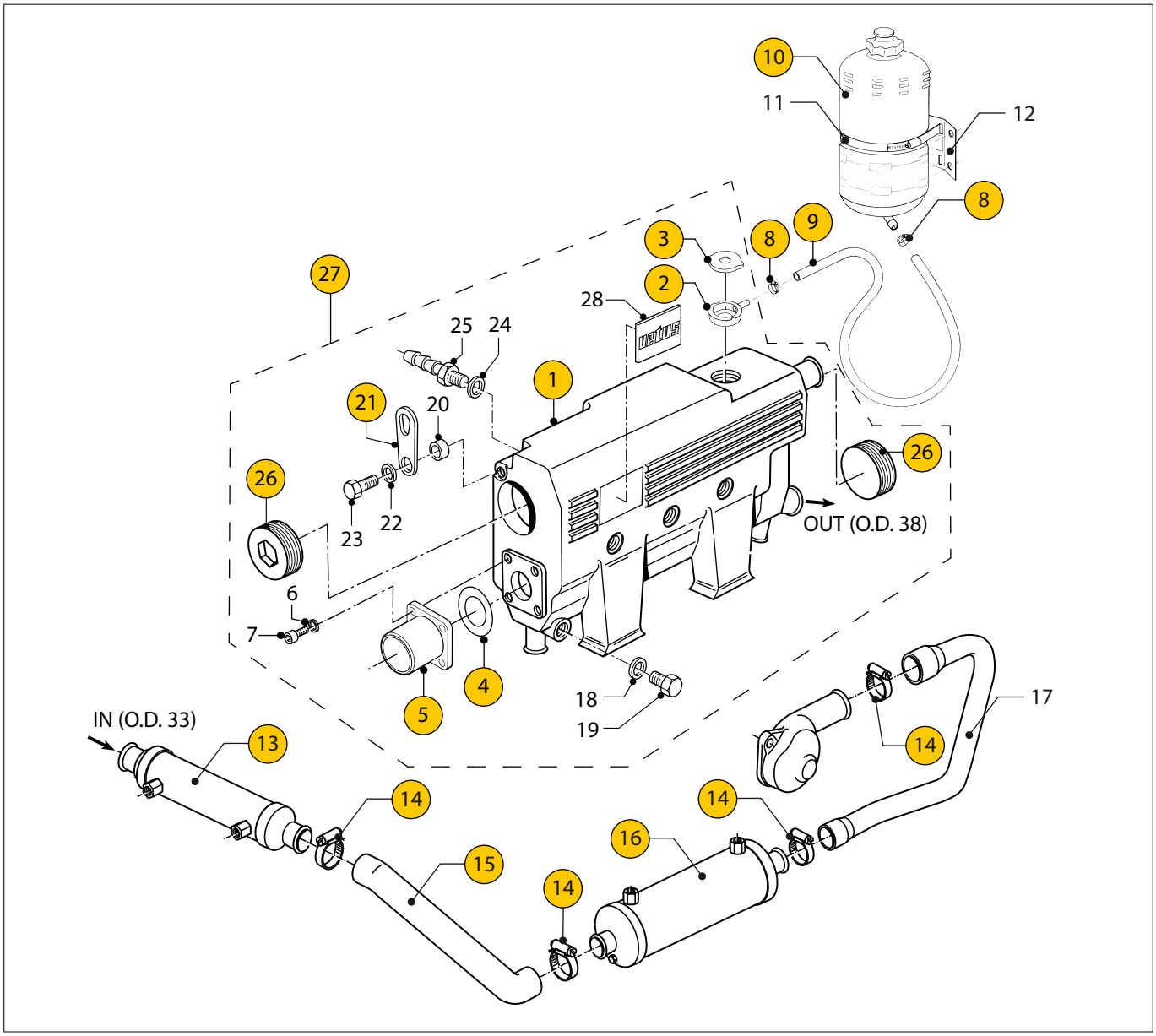

VH4.65 VH4.80 **Kielkoelspruitstuk (<- 03-03)** **Keelcooler manifold (<- 03-03)**

pos.	qty	part	benaming	description
1	1	**STM4545**	Kielkoelspruitstuk	Keelcooler manifold
2	1	**18-14649**	Vulnek	Filler neck
3	1	**18-14715**	Vuldop (Do not open)	Filler cap (Do not open)
4	1	**STM4559**	Pakking	Gasket
5	1	**STM4685**	Uitlaatflens G2	Exhaust flange G2
6	4	**STM1056**	Veerring M8	Spring washer M8
7	4	**STM3742**	Inbusbout M8x20	Allen screw M8x20
8	2	**HCS08**	Klem	Clamp
9	1	**STM9504**	Slang	Hose
10	1	**EXPT1,54**	Expansie tank	Headertank
11	1	**STM9503**	Slangklem 140-180	Hose clamp 140-180
12	1	**STM9502**	Bevestigingsbeugel	Support
13	1	**STM3771**	Oliekoeler 9" x ø55 - G3/8 - ø33 mm	Oil cooler 9" x ø55 - G3/8 - ø33 mm
14	4	**STM3005**	Slangklem 32-44	Hose clamp 32-44
15	1	**STM4630**	Slang	Hose
16	1	**STM4995**	Motoroliekoeler 9"x ø75- G 1/2-ø33	Engine oilcooler 9"x ø75- G 1/2-ø33
17	1	**STM4546**	Slang	Hose
18	1	**STM1062**	Afdichtring	Seal washer

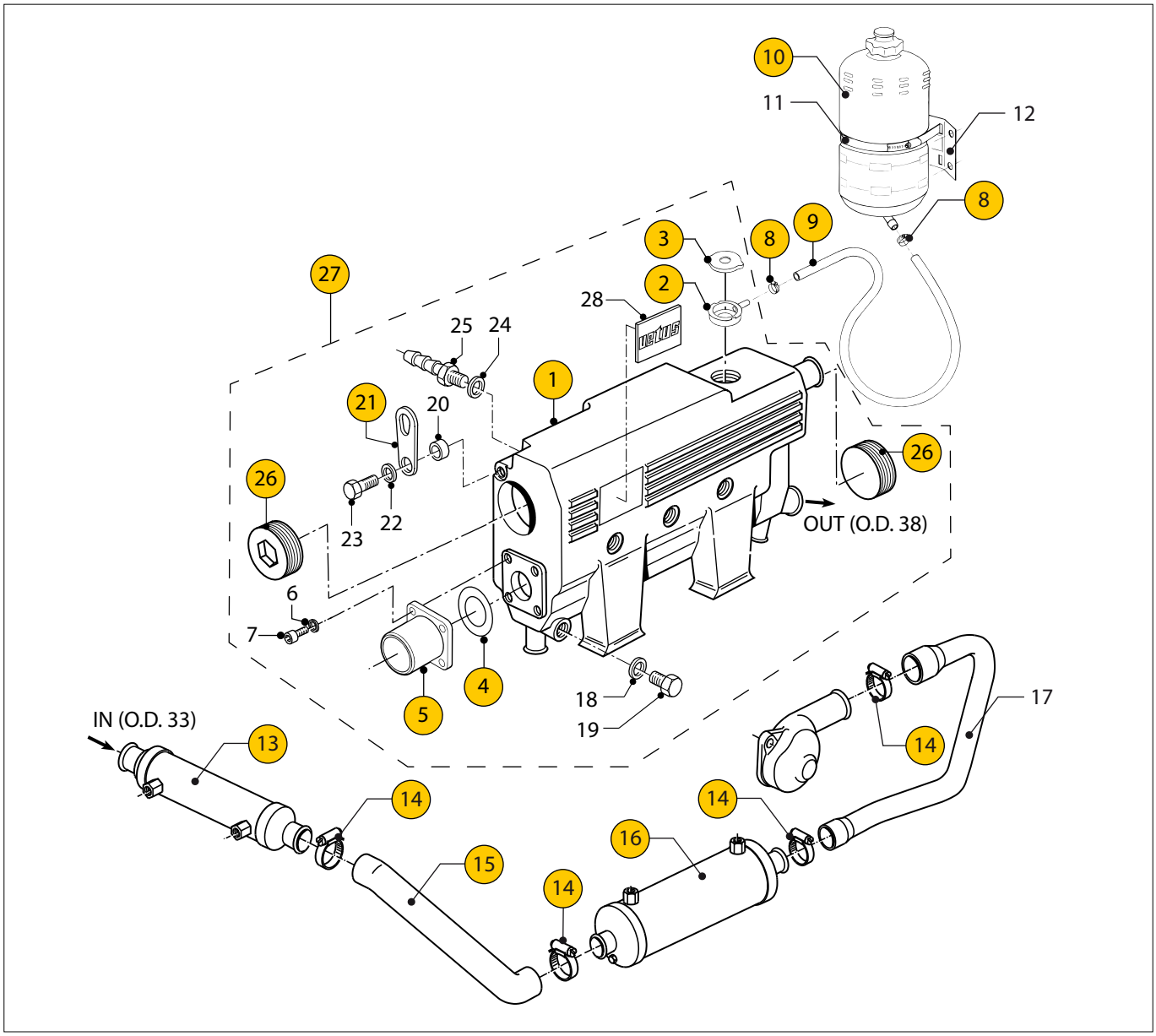

VH4.65 VH4.80 **Kielkoelspruitstuk (<- 03-03)** **Keelcooler manifold (<- 03-03)**

pos.	qty	part	benaming	description
19	1	**STM1059**	Afdichtplug M14x1,5	Plug M14x1,5
20	1	**CT30059**	Ring d=4	Washer d=4
21	1	**STM4518**	Hijsoog	Lifting eye
22	1	**STM1056**	Veerring M8	Spring washer M8
23	1	**STM1610**	Bout M8x25	Bolt M8x25
24	1	**STM9024**	Afdichtring	Seal washer
25	1	**STM4516**	Slangpilaar G1/4-15mm	Hose pillar G1/4-15mm
26	2	**STM4043**	Plug G1,5	Plug G1,5
27	1	**STM4544**	Kielkoelspruitstuk compleet	Keelcooler manifold cpl.
28	1	**STM6531**	Logo plaatje	Type plate

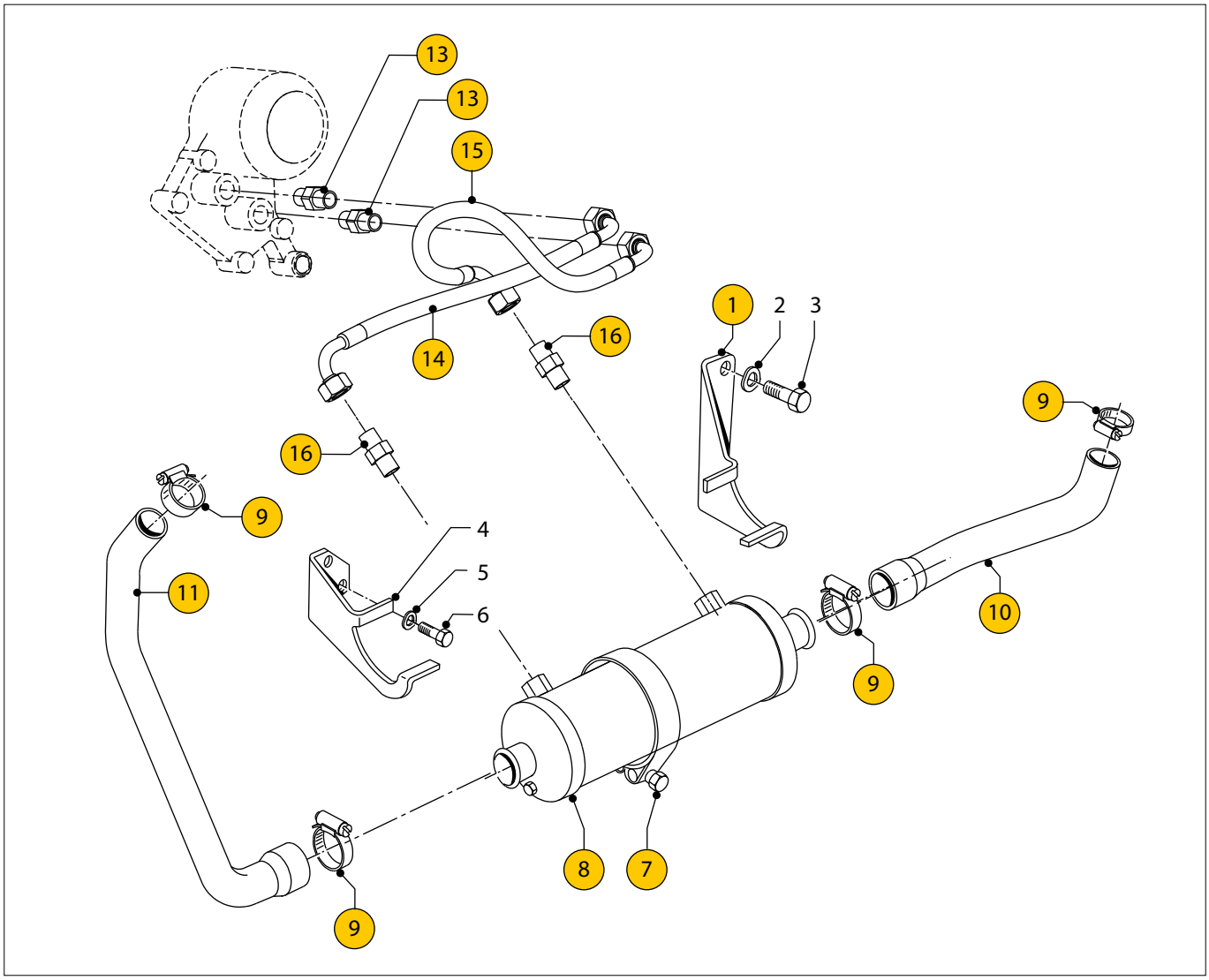

VH4.65 VH4.80 **Motoroliekoeler (Interkoeluitvoering)** **Engine oilcooler (Inter-cool version)**

pos.	qty	part	benaming	description
1	1	**STM4633**	Bevestigingssteun voorzijde	Support front side
2	2	**STM4014**	Veerring M10	Spring washer M10
3	2	**STM9060**	Bout M10x1,25x20	Bolt M10x1,25x20
4	1	**STM4634**	Bevestigingssteun achterzijde	Support back side
5	2	**STM1025**	Gegolfde veerring M6	Wave spring washer M6
6	2	**STM1029**	Bout M6x12	Bolt M6x12
7	2	**HCHD073**	Klem	Clamp
8	1	**STM4995**	Motoroliekoeler 9"xø75- G 1/2-ø33	Engine oilcooler 9"xø75- G 1/2-ø33
9	4	**STM3005**	Slangklem 32-44	Hose clamp 32-44
10	1	**STM4626**	Slang van zeewaterpomp naar motoroliekoeler	Hose from rawwaterpump to engine oilcooler
11	1	**STM4627**	Slang van motoroliekoeler naar ww	Hose from engine oilcooler to heatexchanger
13	2	**STM4988**	Nippel 3/8 BPST x M16x1,5	Nipple 3/8 BPST x M16x1,5
14	1	**STM4989**	Olieslang motor uit	Oil hose engine out
15	1	**STM4990**	Olieslang motor in	Oil hose engine in
16	2	**STM4991**	Nippel G 1/2 - G 1/2	Nipple G 1/2 - G 1/2

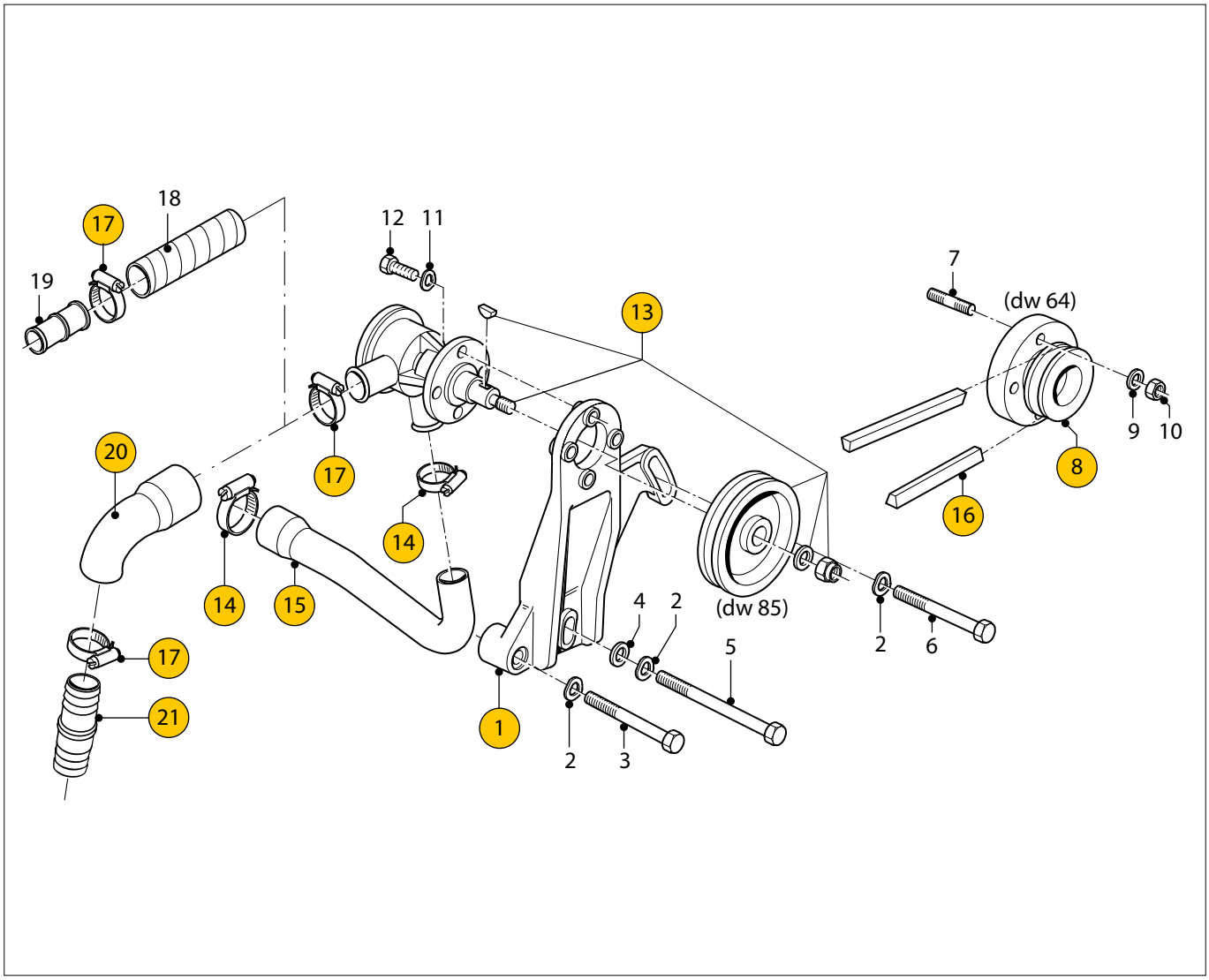

VH4.65 VH4.80 **Zeewaterpomp bevestiging** **Seawaterpump fastening**

pos.	qty	part	benaming	description
1	1	**STM4520**	Steun	Support
2	3	**STM1019**	Gegolfde veerring M8	Wave spring washer M8
3	1	**STM4517**	Inbusbout M8x100	Allen screw M8x100
4	1	**STM3749**	Ring M8	Washer M8
5	1	**STM6121**	Bout M8x110	Bolt M8x110
6	1	**STM8126**	Bout M8x90	Bolt M8x90
7	4	**STM9744**	Tapeind M8x25	Stud M8x25
8	1	**STM4521**	V-snaarschijf	V-belt
9	4	**STM1019**	Gegolfde veerring M8	Wave spring washer M8
10	4	**STM2005**	Moer M8	Nut M8
11	4	**STM1606**	Gegolfde veerring M7	Wave spring washer M7
12	4	**STM7003**	Bout M7x20	Bolt M7x20
13	1	**STM4522**	Zeewaterpomp full cam	Seawater pump full cam
14	2	**STM3005**	Slangklem 32-44	Hose clamp 32-44
15	1	**STM4626**	Slang van zeewaterpomp naar oliekoeler	Hose rawwaterpump to oilcooler
16	1	**STM4523**	V-snaar 10x780	V-belt 10x780
17	2	**HCS25**	Slangklem 25-40	Hose clamp 25-40
18	1	**STM4671**	Slang (<- 03-03)	Hose (<- 03-03)
19	1	**STM4672**	Verloop 28,5-25 (<- 03-03)	Adapter 28,5-25 (<- 03-03)
20	1	**STM4674**	Slang (03-03 ->)	Hose (03-03 ->)
21	1	**STM4675**	Pijp ø 25 (03-03 ->)	Pipe ø 25 (03-03 ->)

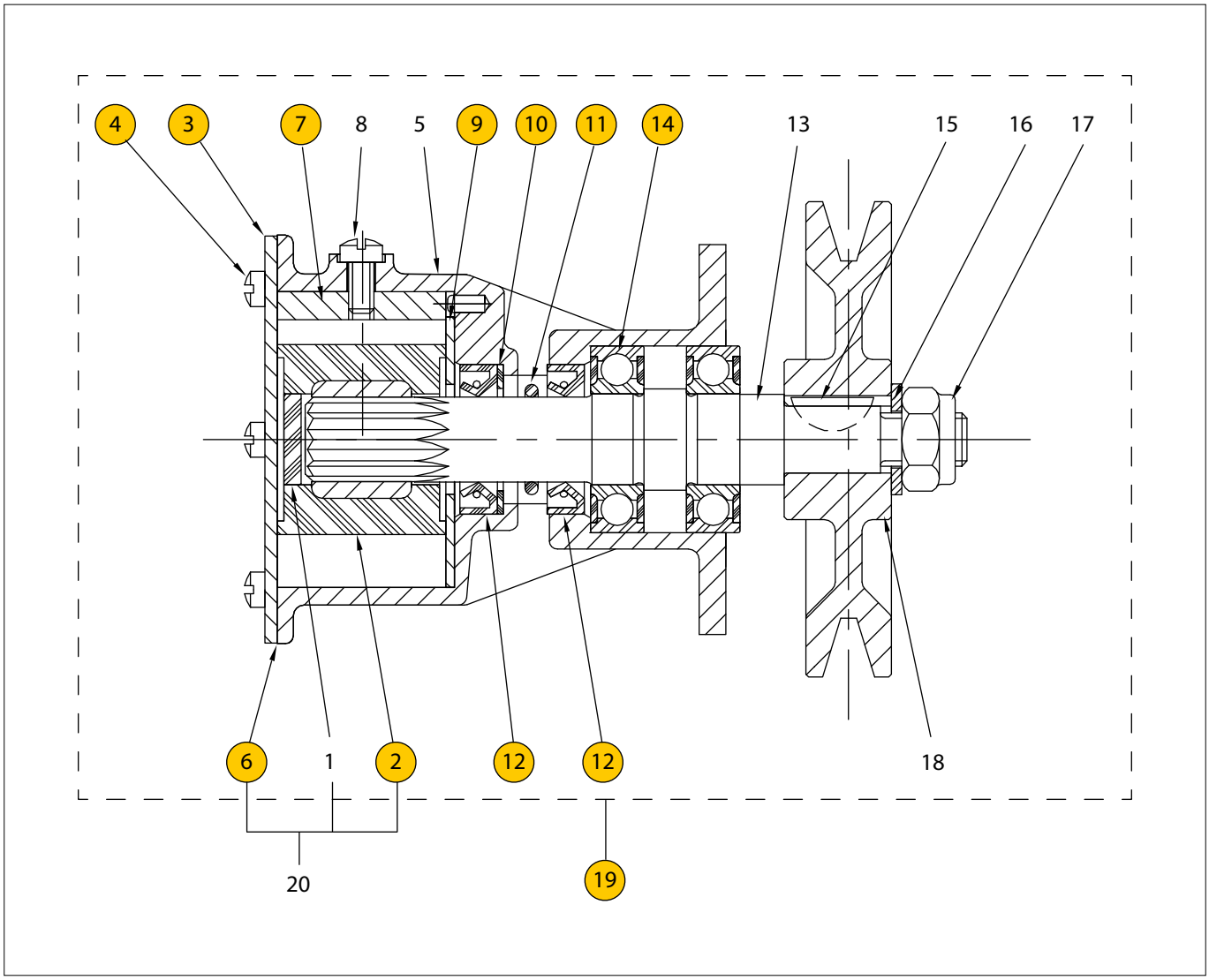

VH4.65 VH4.80 **Zeewaterpomp 03-2026 <-** **Seawater pump 03-2026 <-**

pos.	qty	part	benaming	description
1	1	**STM4651**	Plug	Spline plug
2	1	**STM8074**	Impeller	Impeller
3	1	**STM6164**	Einddeksel	End cover
4	6	**STM4654**	Einddeksel bout	End cover screw
5	1	**STM4655**	Huis	Body
6	1	**STM8603**	Pakking	Gasket
7	1	**STM6588**	Kam (full cam) 5,35 mm	Cam (full cam) 5,35 mm
8	1	**STM6590**	Kam schroef	Cam screw
9	1	**STM6591**	Slijtplaat	Wear plate
10	1	**STM4660**	Vulring	Seal spacer
11	1	**STM4661**	O-ring (slingerring)	O-ring
12	2	**STM6592**	Keerring	Lip seal
13	1	**STM4663**	As	Shaft
14	2	**STM4664**	Lager	Ball bearing
15	1	**STM4665**	Spie	Key
16	1	**STM4666**	Ring	Washer
17	1	**STM4667**	Nyloc moer	Nyloc nut
18	1	**STM4668**	V-snaarschijf	Pulley
19	1	**STM4522**	Zeewaterpomp kompleet	Seawater pump cpl.
20	1	**STM4669**	Service kit (1+2+6)	Service kit (1+2+6)

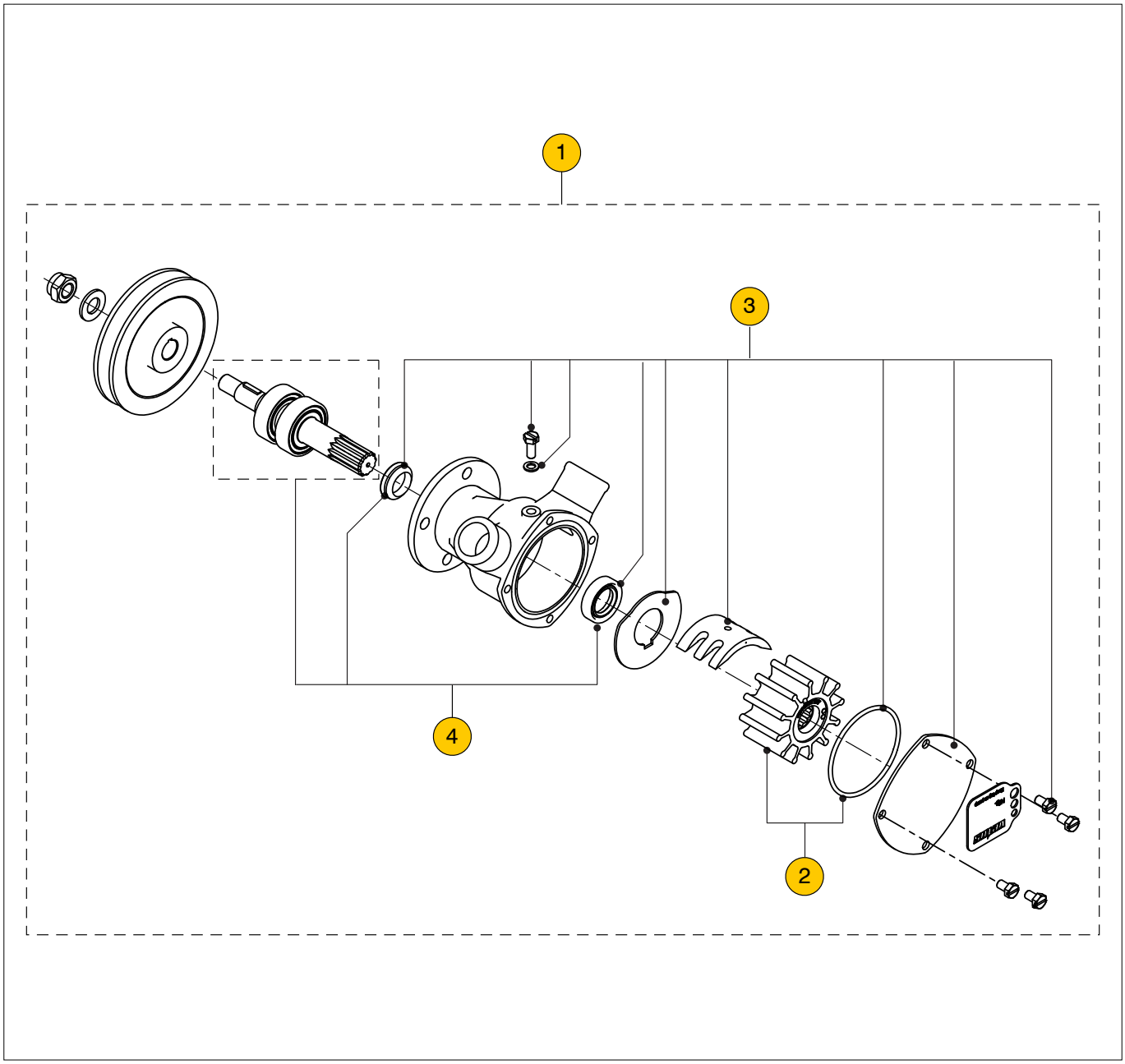

VH4.65 VH4.80 **Zeewaterpomp 03-2026 ->** **Seawater pump 03-2026 ->**

pos.	qty	part	benaming	description
1	1	**STM4522B**	Pomp	Pump
2	1	**STM8074**	Impellerset	Impeller kit
3	1	**VP000193**	Slijtageset	Wear kit
4	1	**VP000198**	Assenset	Shaft kit

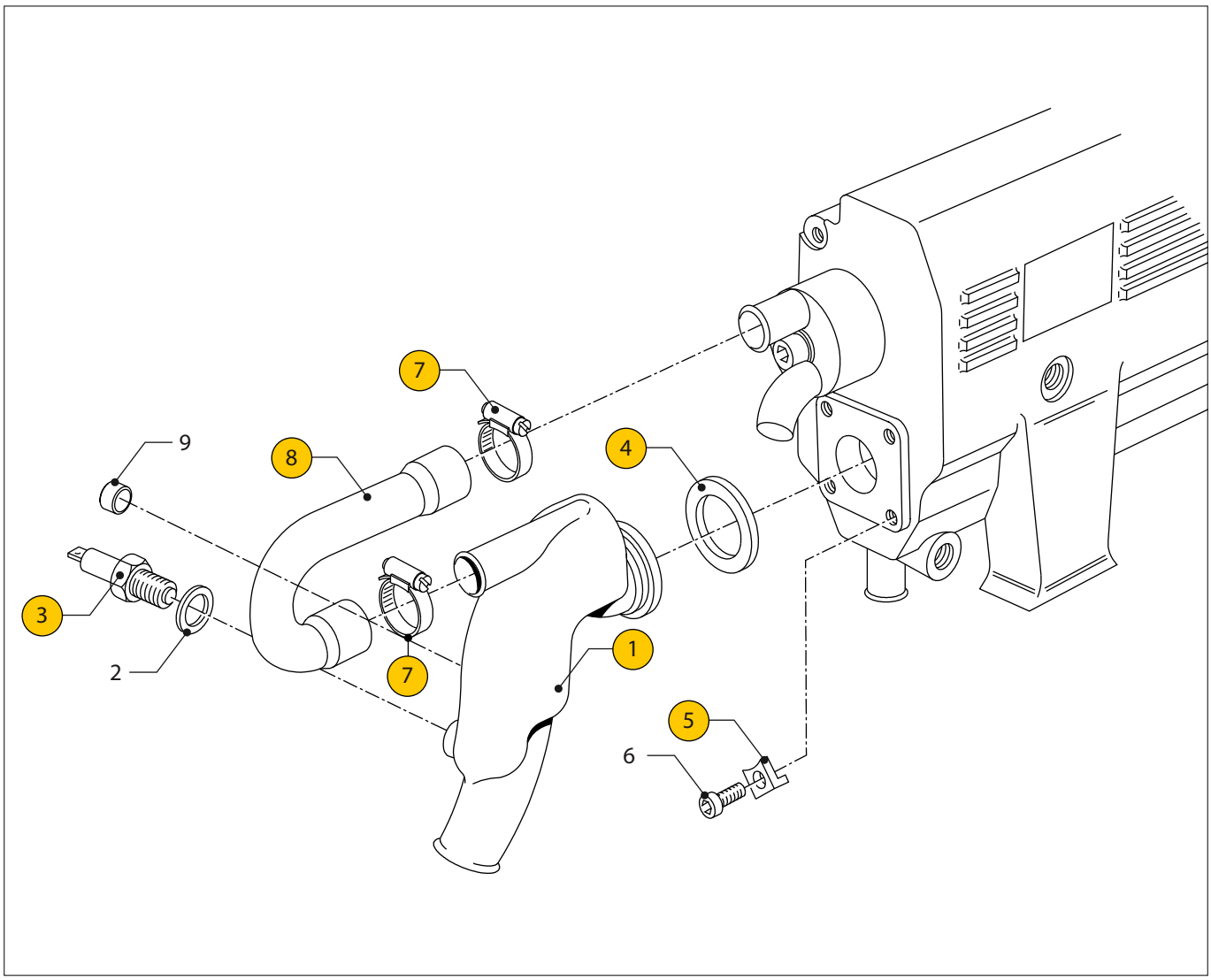

VH4.65 VH4.80 **Uitlaat injectiebocht** **Exhaust injection elbow**

pos.	qty	part	benaming	description
1	1	**STM4560**	Uitlaat injectiebocht ø 60 VH4.65	Exhaust injection elbow ø 60 VH4.65
	1	**STM4575**	Uitlaat injectiebocht ø 75 VH4.80	Exhaust injection elbow ø 75 VH4.80
2	1	**STM2019**	Afdichtring M18	Seal washer M18
3	1	**STM2006**	Buitenwatertemperatuur schakelaar M18x1,5 12-24V 75˚C	Raw water temp. switch M18x1,5 12-24V 75˚C
4	1	**STM4559**	Pakking	Gasket
5	4	**STM6126**	Klemplaat	Clamp plate
6	4	**STM6299**	Inbusbout lage kop M8x22	Allen screw low head M8x22
7	2	**STM3005**	Slangklem 32-44	Hose clamp 32-44
8	1	**STM4625**	Slang uitlaat injectiebocht	Hose exhaust inj. elbow
9	1	**STM3071**	Plug G3/8	Plug G3/8

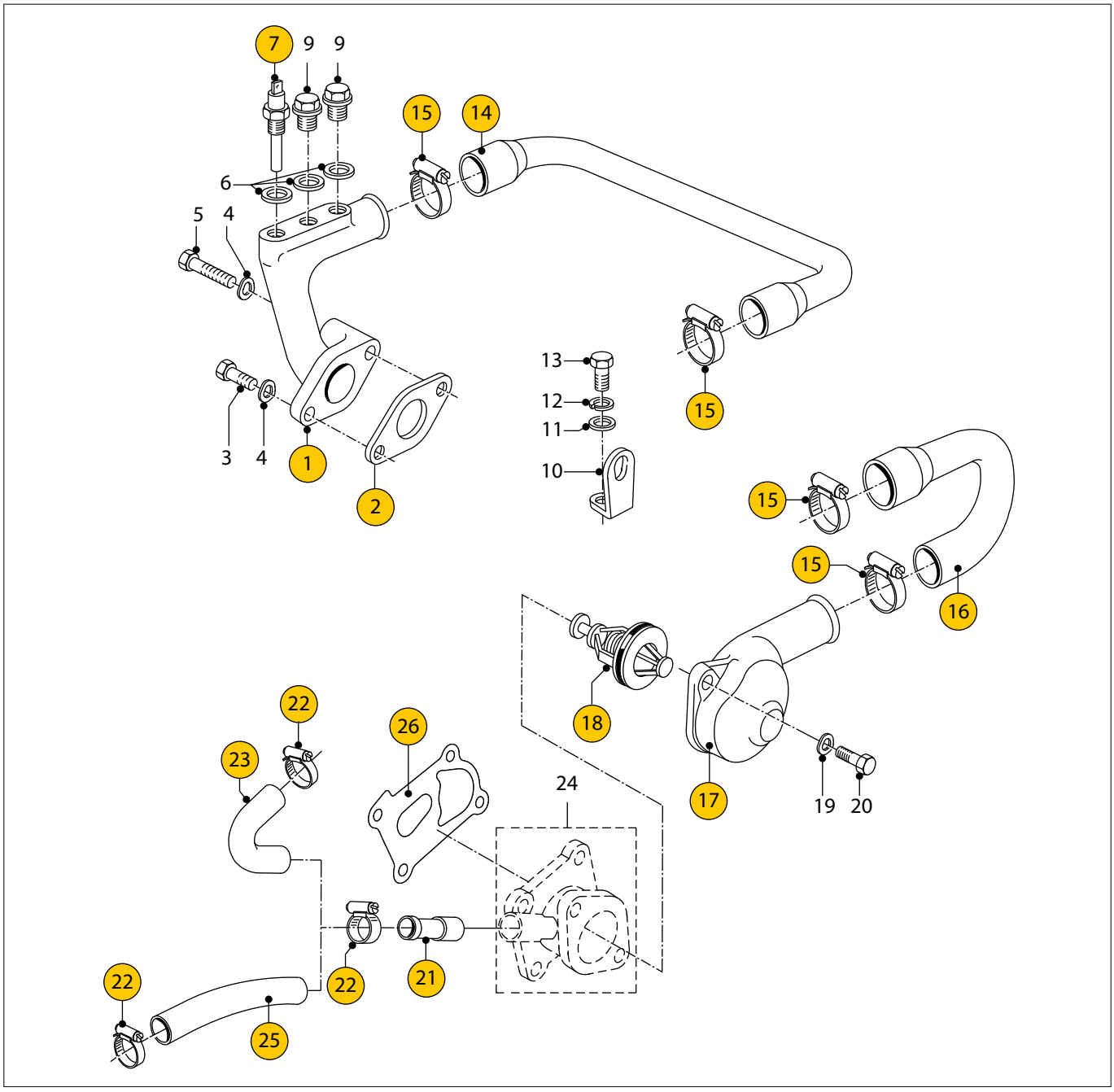

VH4.65 VH4.80 **Thermostaat** **Thermostat**

pos.	qty	part	benaming	description
1	1	**STM4540**	Water uitlaatbocht	Water outlet elbow
2	1	**STM4541**	Pakking	Gasket
3	1	**STM1610**	Bout M8x25	Bolt M8x25
4	2	**STM1019**	Gegolfde veerring M8	Wave spring washer M8
5	1	**STM9256**	Bout M8x55	Bolt M8x55
6	3	**STM1062**	Afdichtring M14	Seal washer M14
7	1	**STM8322**	Binnenwater temperatuur schakelaar M14x1,5 12-24V 105˚C	Temp.switch coolant M14x1,5 12-24V 105˚C
9	2	**STM1059**	Plug M14x1,5	Plug M14x1,5
10	1	**STM4524**	Hijsoog	Lifting eye
11	1	**STM1653**	Ring 8 mm	Washer 8 mm
12	1	**STM1056**	Veerring M8	Spring washer M8
13	1	**STM1610**	Bout M8x25	Bolt M8x25
14	1	**STM4621**	Slang van cylinderkop naar ww	Hose from cyl. head to heatex.
15	4	**STM3005**	Slangklem 32-44	Hose clamp 32-44

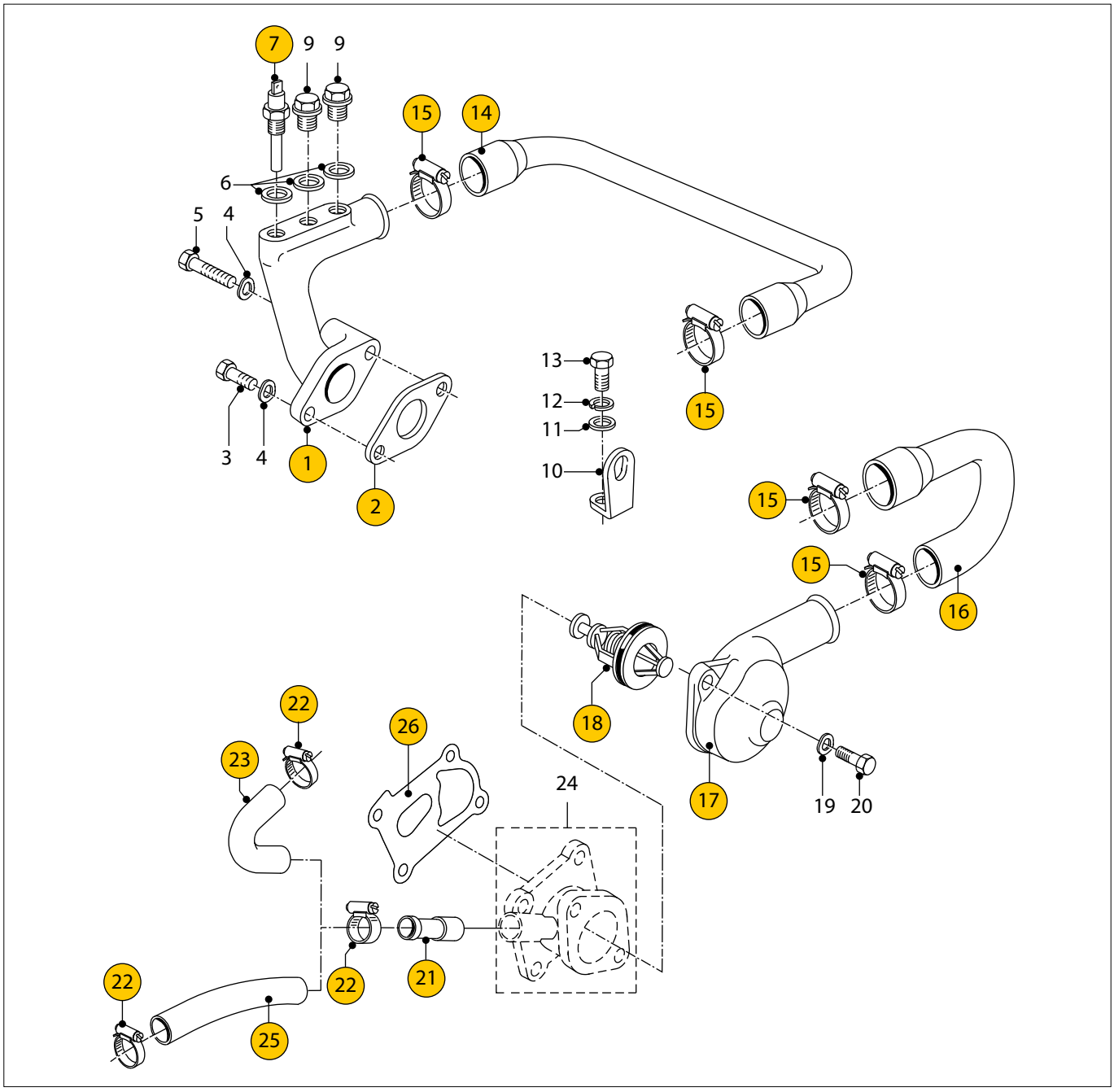

VH4.65 VH4.80 **Thermostaat** **Thermostat**

pos.	qty	part	benaming	description
16	1	**STM4622**	Slang van ww naar thermostaathuis	Hose from heatex. to thermostat housing
17	1	**STM4530**	Thermostaathuisdeksel	Cover
18	1	**STM4976**	Thermostaat 76˚C	Thermostat 76˚C
19	2	**STM1019**	Gegolfde veerring M8	Wave spring washer M8
20	2	**STM8829**	Inbusbout M8x25	Allen screw M8x25
21	1	**STM4531**	Pijp	Pipe
22	2	**HCS16**	Slangklem 19-28	Hose clamp 19-28
23	1	**STM4624**	Slang by-pass/ ww uit (<- 03-03)	Hose by-pass/heatex. out (<- 03-03)
24	1	**STM4534**	Thermostaathuis	Thermostat housing
25	1	**STM4585**	Slang (03-03 ->)	Hose (03-03 ->)
26	1	**STM4936**	Pakking	Gasket

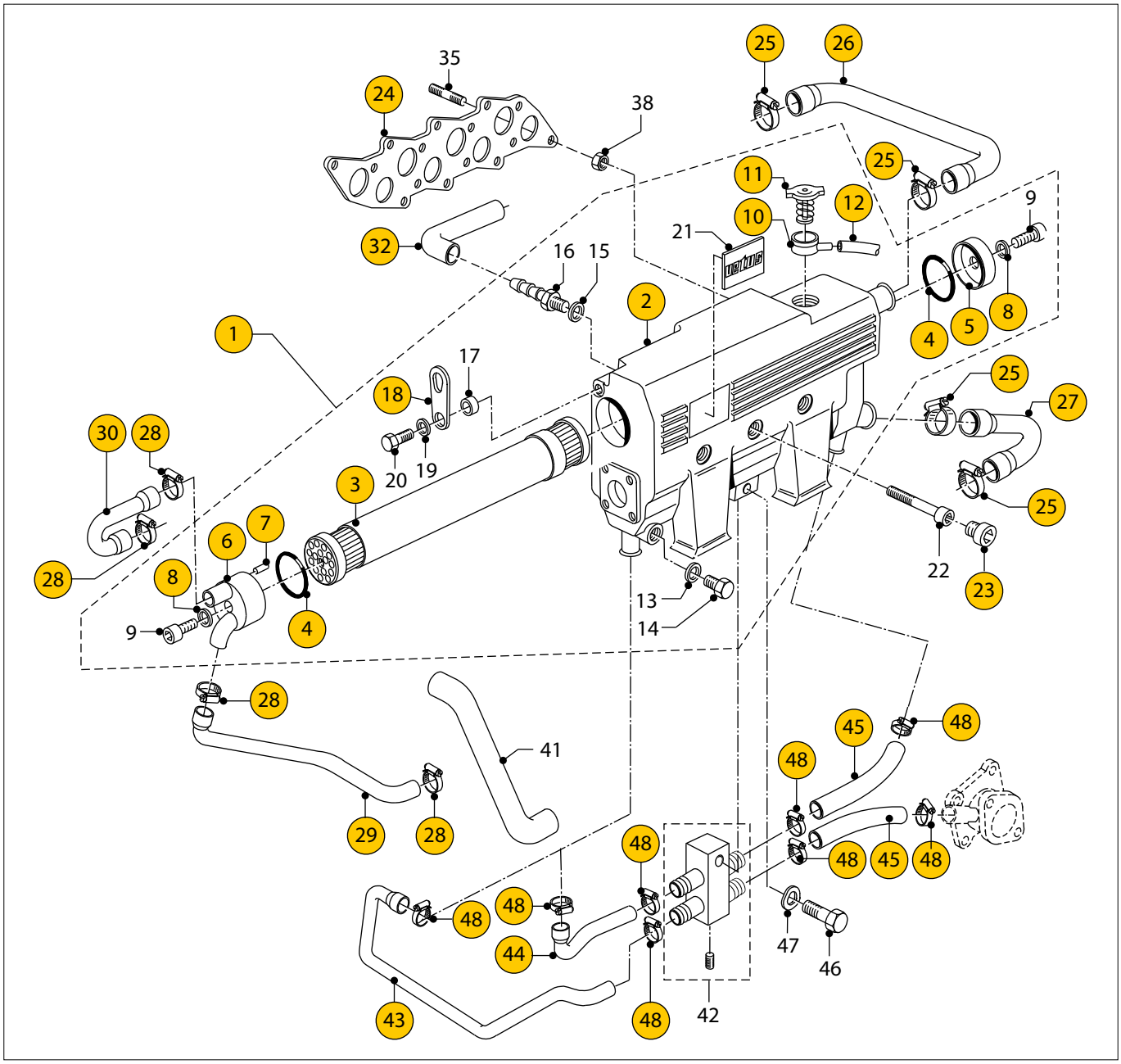

VH4.65 VH4.80 **Warmtewisselaar unit (03-03 ->)** **Heatexchanger unit (03-03 ->)**

pos.	qty	part	benaming	description
1	1	**STM4506**	Warmtewisselaar kompleet	Heatexchanger cpl.
2	1	**STM4504**	Warmtewisselaarhuis	Heatexchanger housing
3	1	**STM4505**	Pijpenbundel	Tube stack
4	2	**STM6113**	O-ring 61x2,5	O-ring 61x2,5
5	1	**STM7446**	Omkeerdeksel	Cover
6	1	**STM6503**	Aansluitdeksel	Cover
7	1	**STM6130**	Spanbus	Busch
8	2	**08-01108**	Afdichtring	Seal washer
9	2	**STM1006**	Inbusbout M8x30	Allen screw M8x30
10	1	**18-14649**	Vulnek	Filler neck
11	1	**18-14715**	Vuldop 0,5 Bar	Filler cap 0,5 bar
12	1	**FUHOSE13**	Slang	Hose
13	1	**STM1062**	Afdichtring	Seal washer
14	1	**STM1059**	Afdichtplug M14x1,5	Plug M14x1,5
15	1	**STM9024**	Afdichtring	Seal washer
16	1	**STM4516**	Slangpilaar G1/4-15mm	Hose pillar G1/4-15mm

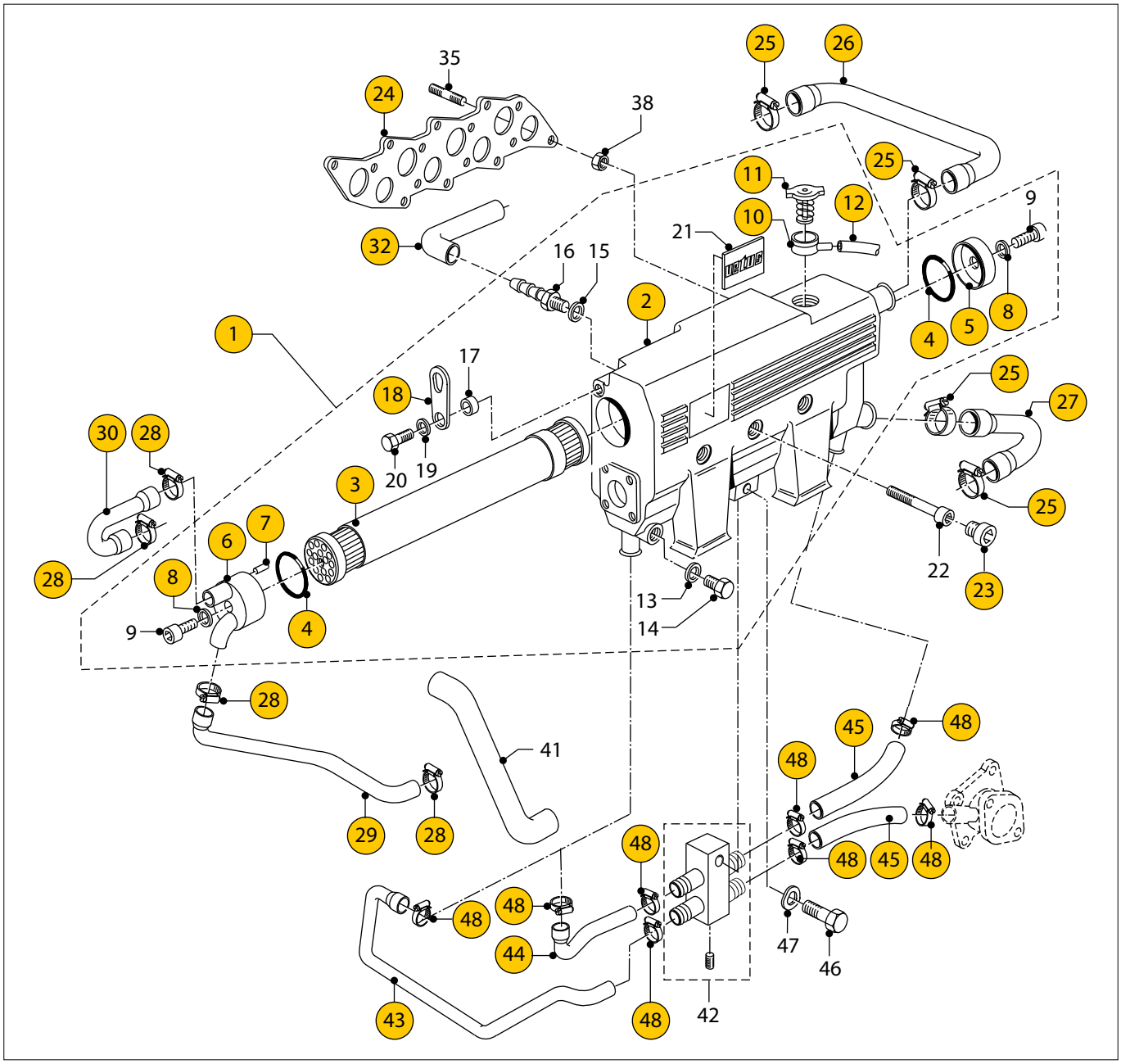

VH4.65 VH4.80 **Warmtewisselaar unit (03-03 ->)** **Heatexchanger unit (03-03 ->)**

pos.	qty	part	benaming	description
17	1	**CT30059**	Ring d=4	Washer d=4
18	1	**STM4518**	Hijsoog	Lifting eye
19	1	**STM1056**	Veerring M8	Spring washer M8
20	1	**STM1610**	Bout M8x25	Bolt M8x25
21	1	**STM6531**	Logo plaatje	Type plate
22	4	**STM4517**	Inbusbout lage kop M8x100	Allen screw low head M8x100
23	3	**STM4503**	Plug M20x1,5	Plug M20x1,5
24	1	**STM4980**	Pakking	Gasket
25	4	**STM3005**	Slangklem 32-44	Hose clamp 32-44
26	1	**STM4621**	Slang cylinderkop naar ww	Hose cyl. head to heat exchanger
27	1	**STM4622**	Slang van ww naar thermostaat	Hose from heatex. to thermostat housing
28	4	**STM3005**	Slangklem 32-44	Hose clamp 32-44
29	1	**STM4627**	Slang van oliekoeler naar ww	Hose from oilcooler to heatex.
30	1	**STM4625**	Slang van ww naar injectiebocht	Hose from heatex. to inj. elbow
32	1	**STM4620**	Slang carterontluchting	Hose crankcase bleeding
35	4	**STM9744**	Tapeind M8x25	Stud M8x25

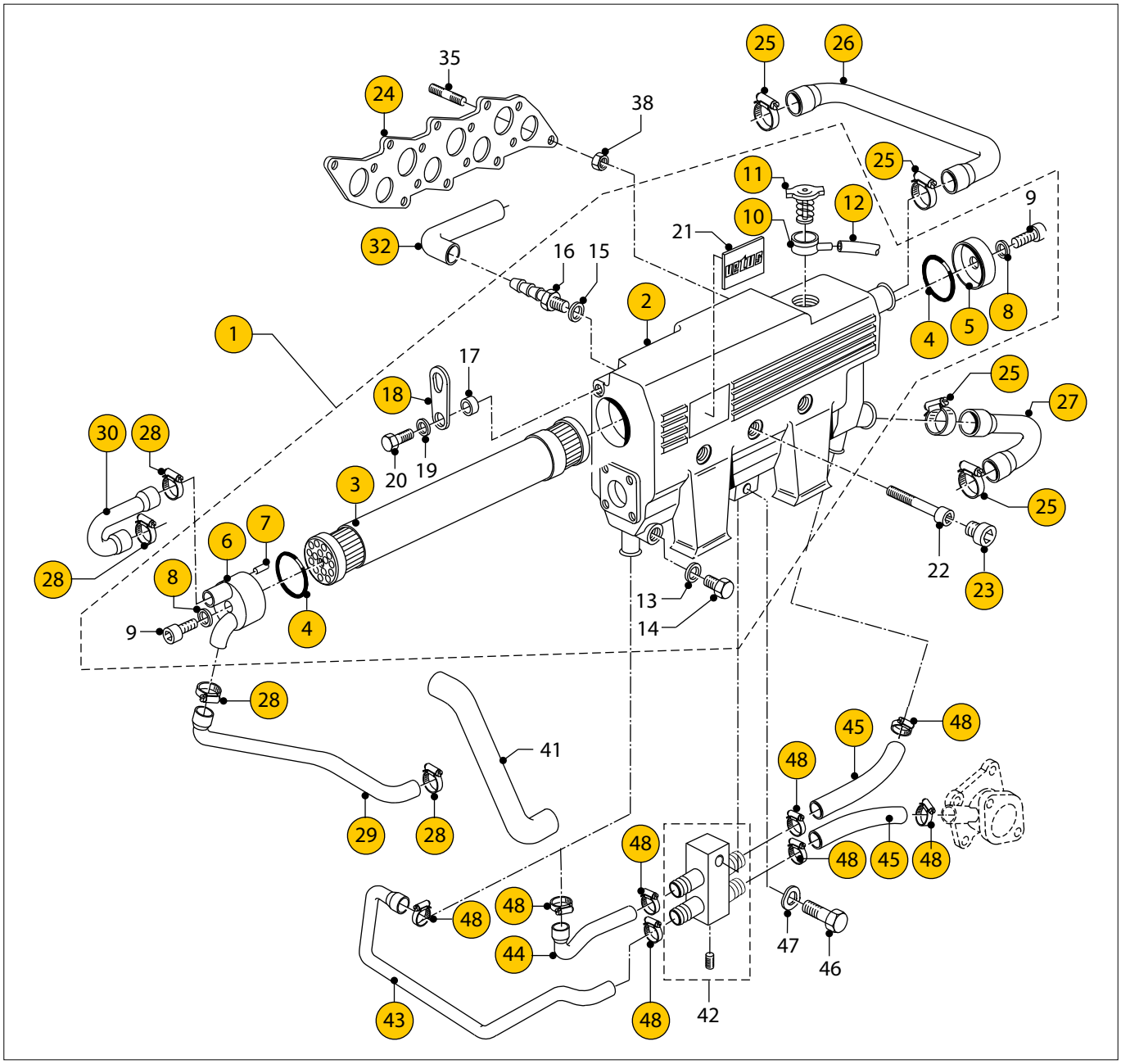

VH4.65 VH4.80 **Warmtewisselaar unit (03-03 ->)** **Heatexchanger unit (03-03 ->)**

pos.	qty	part	benaming	description
38	4	**STM4536**	Moer M8	Nut M8
41	1	**STM4630**	Slang van motoroliekoeler naar kk oliekoeler	Hose from cooler to cooler
42	1	**STM4586**	Verdeelstuk compleet	Manifold cpl.
43	1	**STM4583**	Slang	Hose
44	1	**STM4584**	Slang	Hose
45	2	**STM4585**	Slang	Hose
46	1	**STM4055**	Bout M8x30	Bolt M8x30
47	1	**STM1056**	Veerring M8	Spring washer M8
48	8	**STM2012**	Slangklem 19-28	Hose clamp 19-28

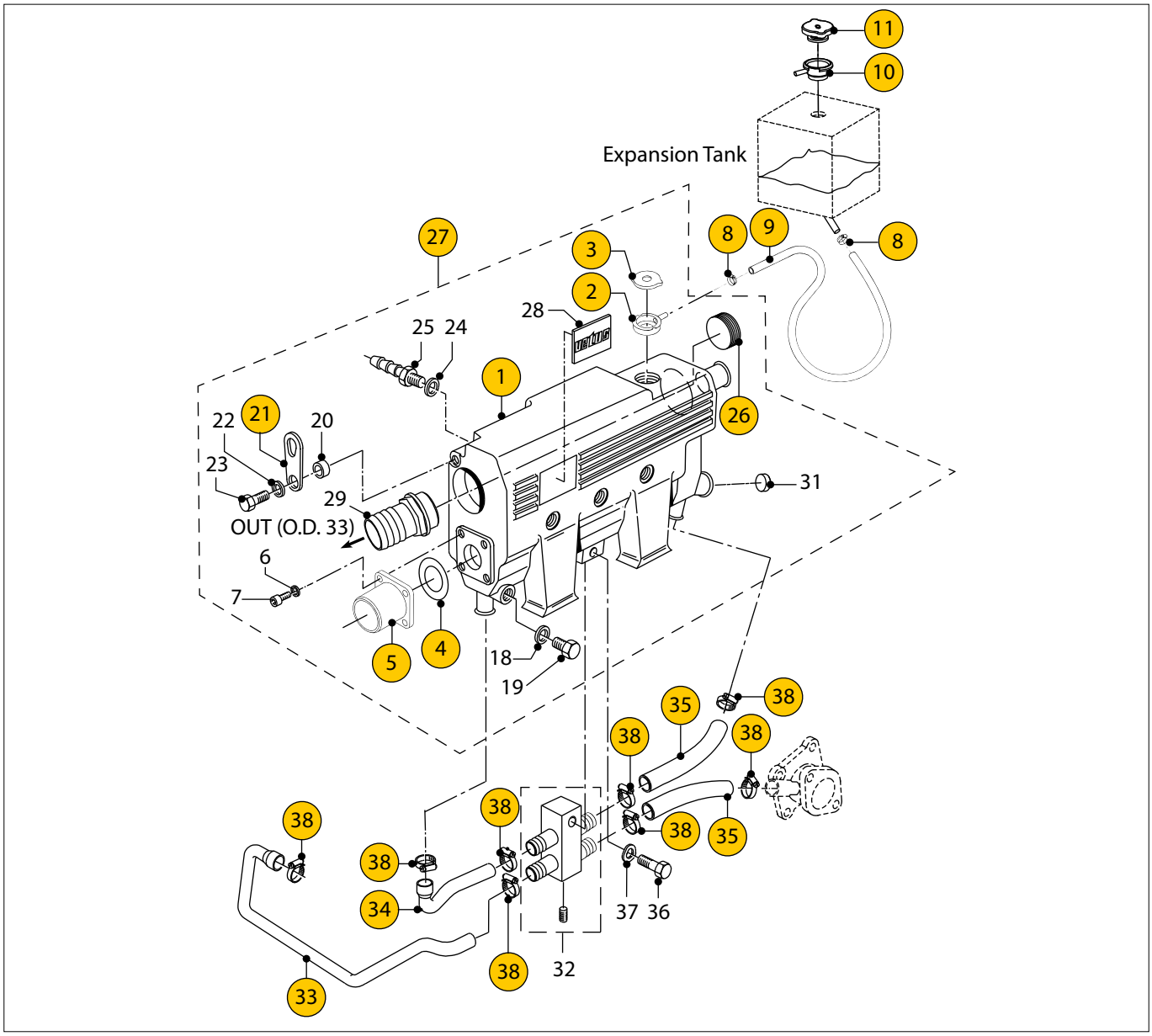

VH4.65 VH4.80 **Kielkoelspruitstuk (03-03 ->)** **Keelcooler manifold (03-03 ->)**

pos.	qty	part	benaming	description
1	1	**STM4545**	Kielkoelspruitstuk	Keelcooler manifold
2	1	**18-14649**	Vulnek	Filler neck
3	1	**18-14715**	Vuldop (Do not open)	Filler cap (Do not open)
4	1	**STM4559**	Pakking	Gasket
5	1	**STM4685**	Uitlaatflens G2	Exhaust flange G2
6	4	**STM1056**	Veerring M8	Spring washer M8
7	4	**STM3742**	Inbusbout M8x20	Allen screw M8x20
8	2	**HCS08**	Klem	Clamp
9	1	**STM9504**	Slang	Hose
10	1	**18-14649**	Vulnek	Filler neck
11	1	**STM1017**	Vul/drukdop 0,5 bar	Filler/pressure cap 0.5 bar
13	1	**STM3771**	Oliekoeler 9" x ø55 - G3/8 - ø33 mm	Oil cooler 9" x ø55 - G3/8 - ø33 mm
14	4	**STM3005**	Slangklem 32-44	Hose clamp 32-44
15	1	**STM4630**	Slang	Hose
16	1	**STM4995**	Motoroliekoeler 9"xø75- G 1/2-ø33	Engine oilcooler 9"xø75- G 1/2-ø33
17	1	**STM4677**	Slang	Hose
18	1	**STM1062**	Afdichtring	Seal ring
19	1	**STM1059**	Afdichtplug M14 x 1,5	Seal plug M14 x 1.5

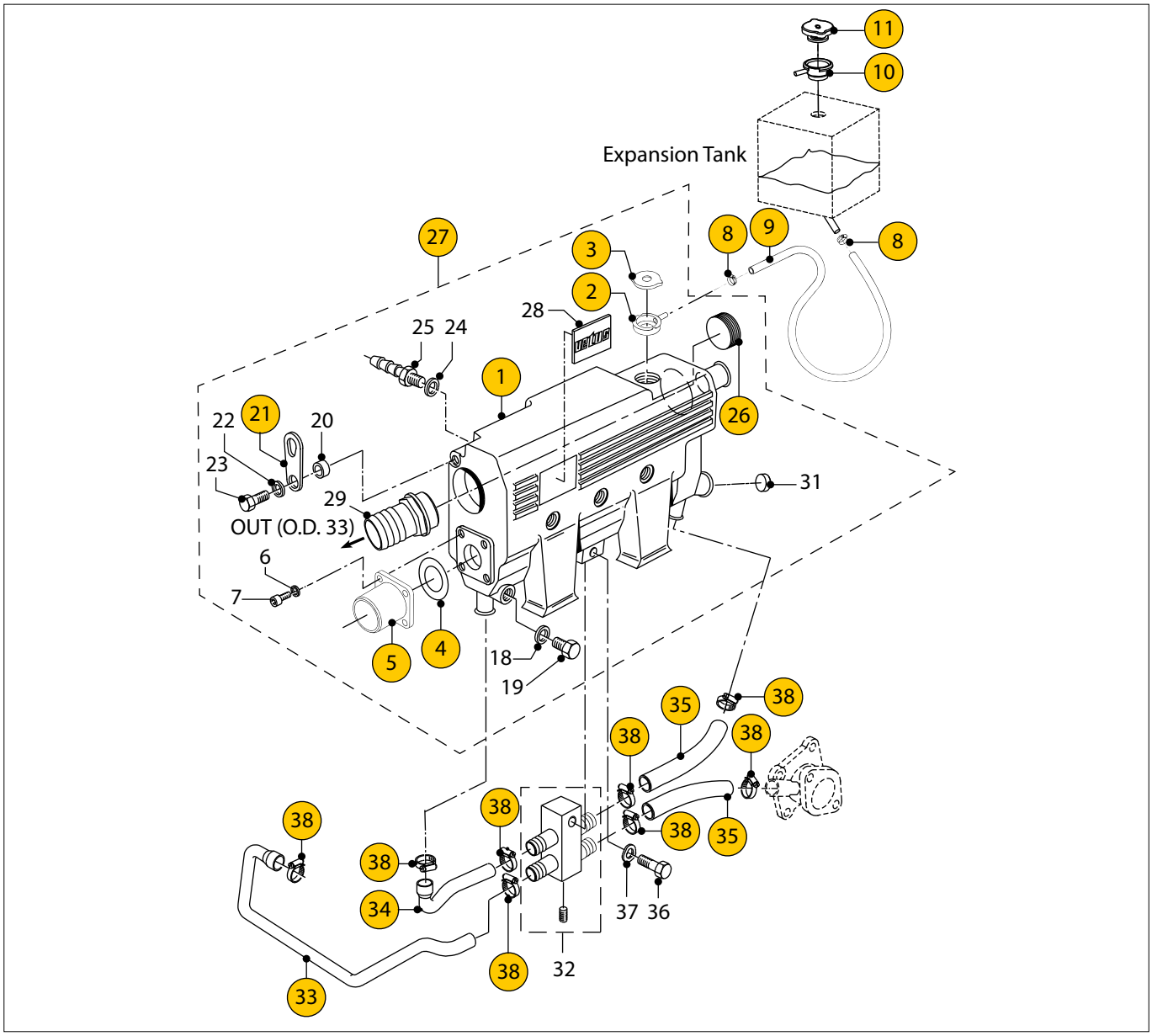

VH4.65 VH4.80 **Kielkoelspruitstuk (03-03 ->)** **Keelcooler manifold (03-03 ->)**

pos.	qty	part	benaming	description
20	1	**CT30059**	Ring d=4	Washer d=4
21	1	**STM4518**	Hijsoog	Lifting hook
22	1	**STM1056**	Veerring M8	Spring washer M8
23	1	**STM1610**	Bout M8x25	Bolt M8x25
24	1	**STM9024**	Afdichtring	Seal ring
25	1	**STM4526**	Slangpilaar G 1/4 - 15 mm	Hose pillar G 1/4 - 15 mm
26	1	**STM4043**	Plug G 1 1/2	Plug G 1 1/2
27	1	**STM4544**	Kielkoelspruitstuk compleet	Keelcooler manifold complete
28	1	**STM6531**	Logoplaatje	Type plate
29	1	**STM7673**	Slangpilaar G 1 1/2 - 33 mm	Hose pillar G 1 1/2 - 33 mm
31	1	**STM8169**	Plug G1	Plug G1
32	1	**STM4586**	Verdeelstuk compleet	Manifold cpl.
33	1	**STM4583**	Slang	Hose
34	1	**STM4584**	Slang	Hose
35	2	**STM4585**	Slang	Hose
36	1	**STM4055**	Bout M8x30	Bolt M8x30
37	1	**STM1056**	Veerring M8	Spring washer M8
38	8	**STM2012**	Slangklem 19-28	Hose clamp 19-28

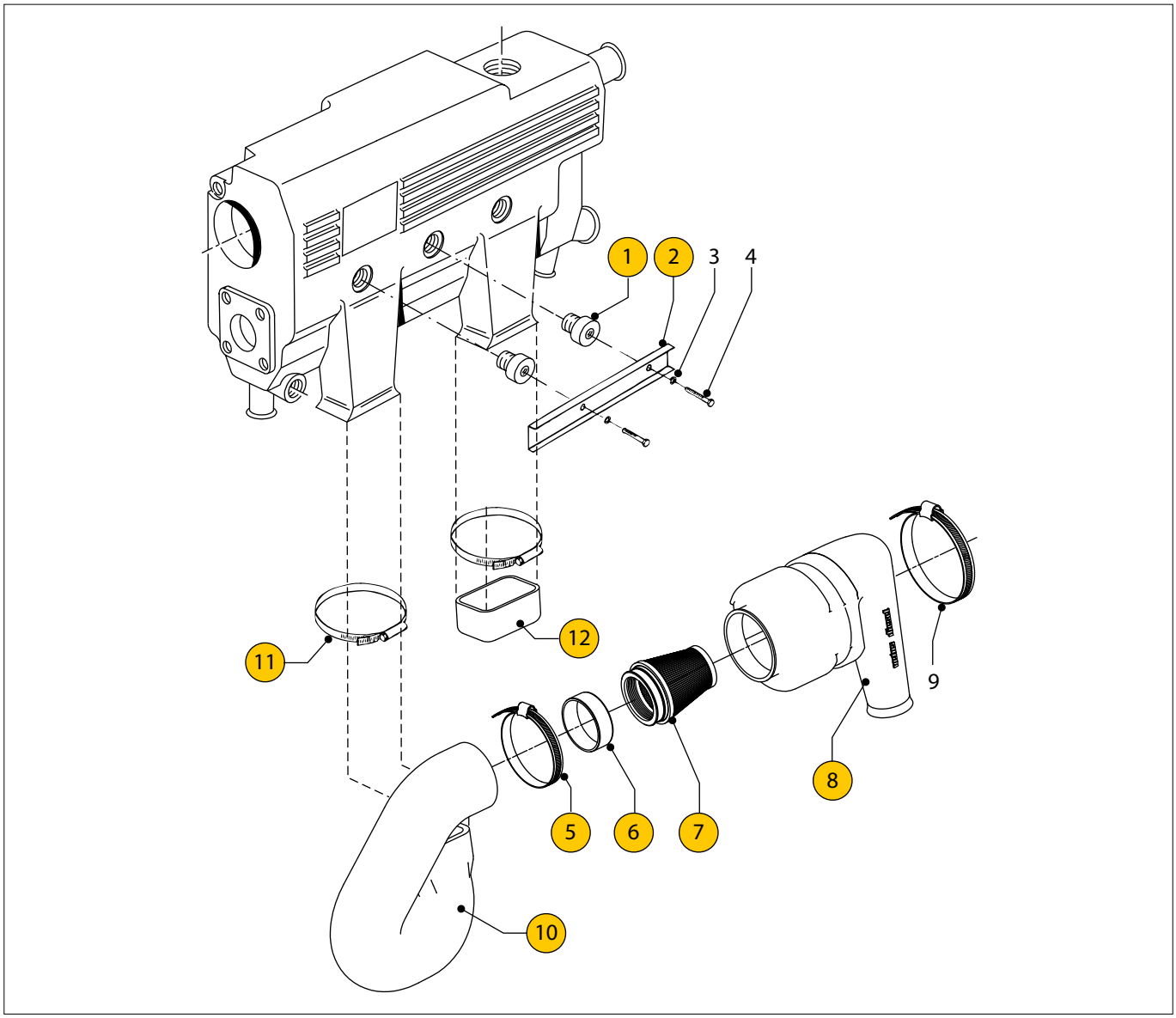

VH4.65 VH4.80 **Luchtfilter/ geluidsdemper** **Aircleaner/ muffler**

pos.	qty	part	benaming	description
1	2	**STM4689**	Plug	Plug
2	1	**STM4690**	Steun	Support
3	2	**STM1056**	Veerring M8	Spring washer M8
4	2	**STM3355**	Bout M8x20	Bolt M8x20
5	1	**STM8148**	Slangklem 58-75	Hose clamp 58-75
6	1	**STM8801**	Bus	Bush
7	1	**STM8517**	Luchtfilter	Aircleaner
8	1	**STM8518**	Luchtinlaatkast	Air intake housing
9	1	**STM9503**	Slangklem 120-140	Hose clamp 120-140
10	1	**STM4688**	Slang	Hose
11	2	**HCS60**	Slangklem 60-80	Hose clamp 60-80
12	1	**STM4691**	Dop	Cover

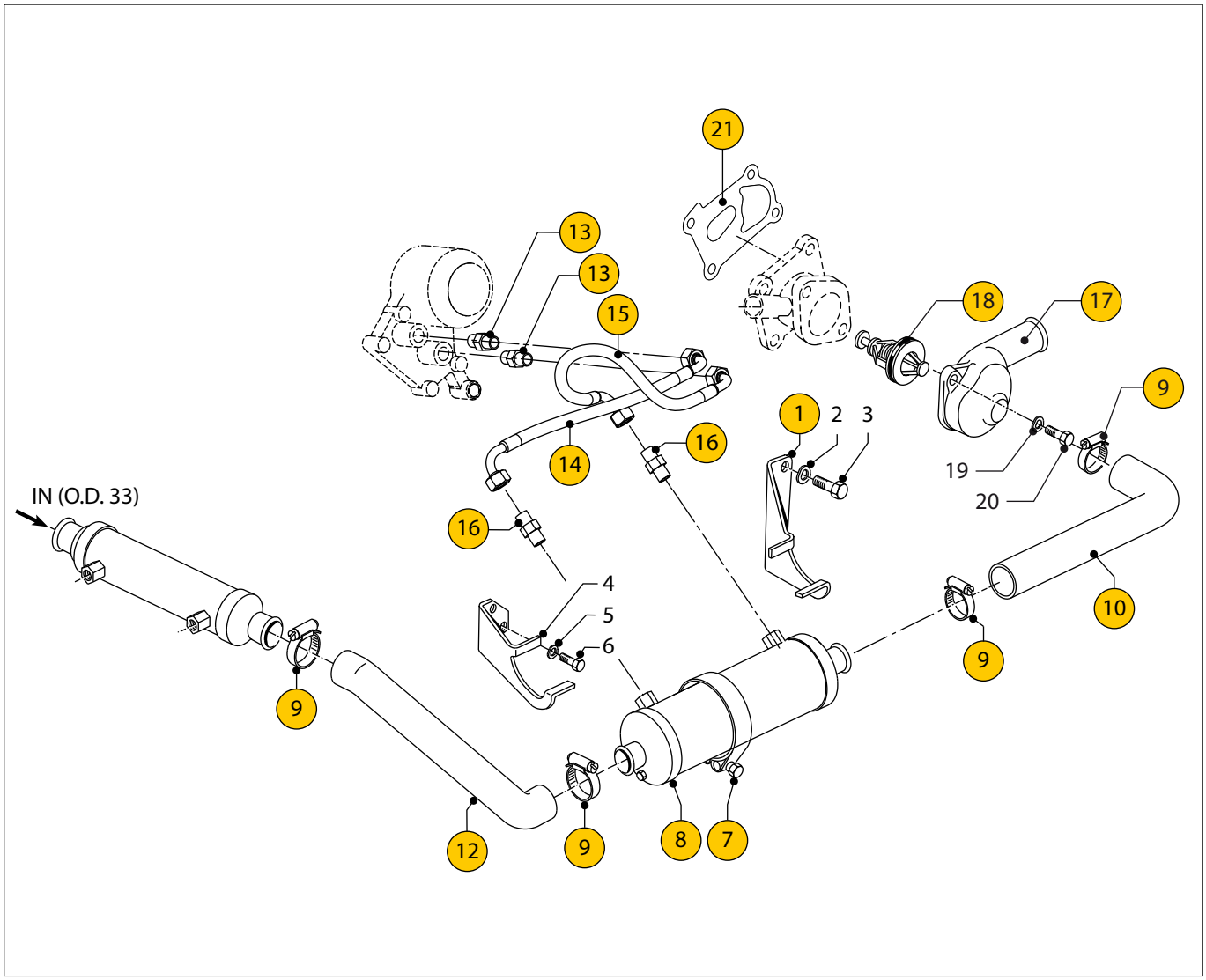

VH4.65 VH4.80 **Motoroliekoeler (Kielkoeluitvoering)** **Engine oilcooler (Keel-cool version)**

pos.	qty	part	benaming	description
1	1	**STM4633**	Bevestigingssteun voorzijde	Support front side
2	2	**STM4014**	Veerring M10	Spring washer M10
3	2	**STM9060**	Bout M10x1,25x20	Bolt M10x1,25x20
4	1	**STM4634**	Bevestigingssteun achterzijde	Support back side
5	2	**STM1025**	Gegolfde veerring M6	Wave spring washer M6
6	2	**STM1029**	Bout M6x12	Bolt M6x12
7	2	**HCHD073**	Klem	Clamp
8	1	**STM4995**	Motoroliekoeler 9"xø75- G 1/2-ø33	Engine oilcooler 9"xø75- G 1/2-ø33
9	4	**STM3005**	Slangklem 32-44	Hose clamp 32-44
10	1	**STM4677**	Slang van thermostaat naar motoroliekoeler	Hose from thermostat to engine oilcooler
12	1	**STM4630**	Slang van motoroliekoeler naar kk oliekoeler	Hose from engine oilcooler to gearbox oilcooler
13	2	**STM4988**	Nippel M16x1,5 - M16x1,5	Nipple M16x1,5 - M16x1,5
14	1	**STM4989**	Olieslang motor uit	Oil hose engine out
15	1	**STM4990**	Olieslang motor in	Oil hose engine in
16	2	**STM4991**	Nippel G 1/2 - G 1/2	Nipple G 1/2 - G 1/2
17	1	**STM4530**	Thermostaatdeksel	Thermostat cover
18	1	**STM4976**	Thermostaat 76°C	Thermostat 76°C
19	2	**STM1019**	Veerring M8	Spring washer M8
20	2	**STM1610**	Bout M8 x 25	Bolt M8 x 25
21	1	**STM4936**	Pakking	Gasket

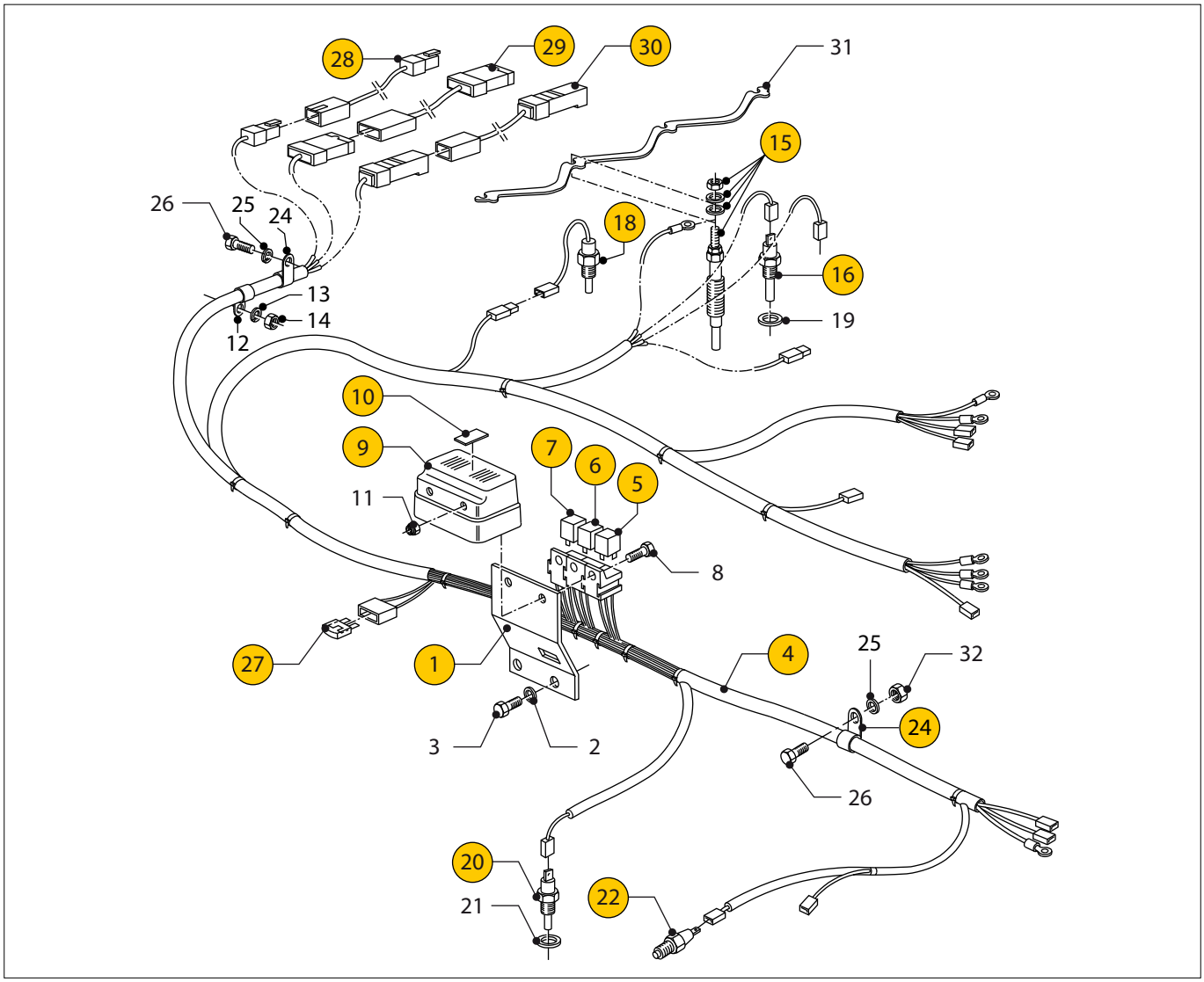

VH4.65	VH4.80		Bedrading	Wiring
pos.	qty	part	benaming	description
1	1	**STM4612**	Relais steun	Relais support
2	2	**STM1056**	Veerring M8	Spring washer M8
3	2	**STM3355**	Bout M8x20	Bolt M8x20
4	1	**STM4610**	Motorbedrading	Engine wiring
5	1	**STM9050**	Stoprelais 12V-30A	Stop relais 12V-30A
6	1	**STM9050**	Startrelais 12V-30A	Start relais 12V-30A
7	1	**STM9043**	Gloeirelais 12V-70A	Glow relais 12V-70A
8	2	**CT40075**	Bout M5x16	Bolt M5x16
9	1	**STM4611**	Deksel	Cover
10	1	**STM7591**	Sticker	Sticker
11	2	**STM6159**	Zelfborgende moer M5	Nyloc nut M5
12	1	**STM4616**	Klem	Clamp
13	1	**STM4014**	Veerring M10	Spring washer M10
14	1	**STM4018**	Moer M10	Nut M10
15	4	**STM4972**	Gloeibougie	Glow plug
16	1	**STM8322**	Binnenwater temperatuur schakelaar M14x1,5 12-24V 105˚C	Temp.switch cooland M14x1,5 12-24V 105˚C
18	1	**STM4985**	Brandstofklep (ETR)	Fuel valve (ETR)
19	1	**STM1062**	Afdichtring M14	Seal washer M14
20	1	**STM2006**	Buitenwatertemperatuur schakelaar M18x1,5 12-24V 75˚C	Temp switch raw water M18x1,5 12-24V 75˚C

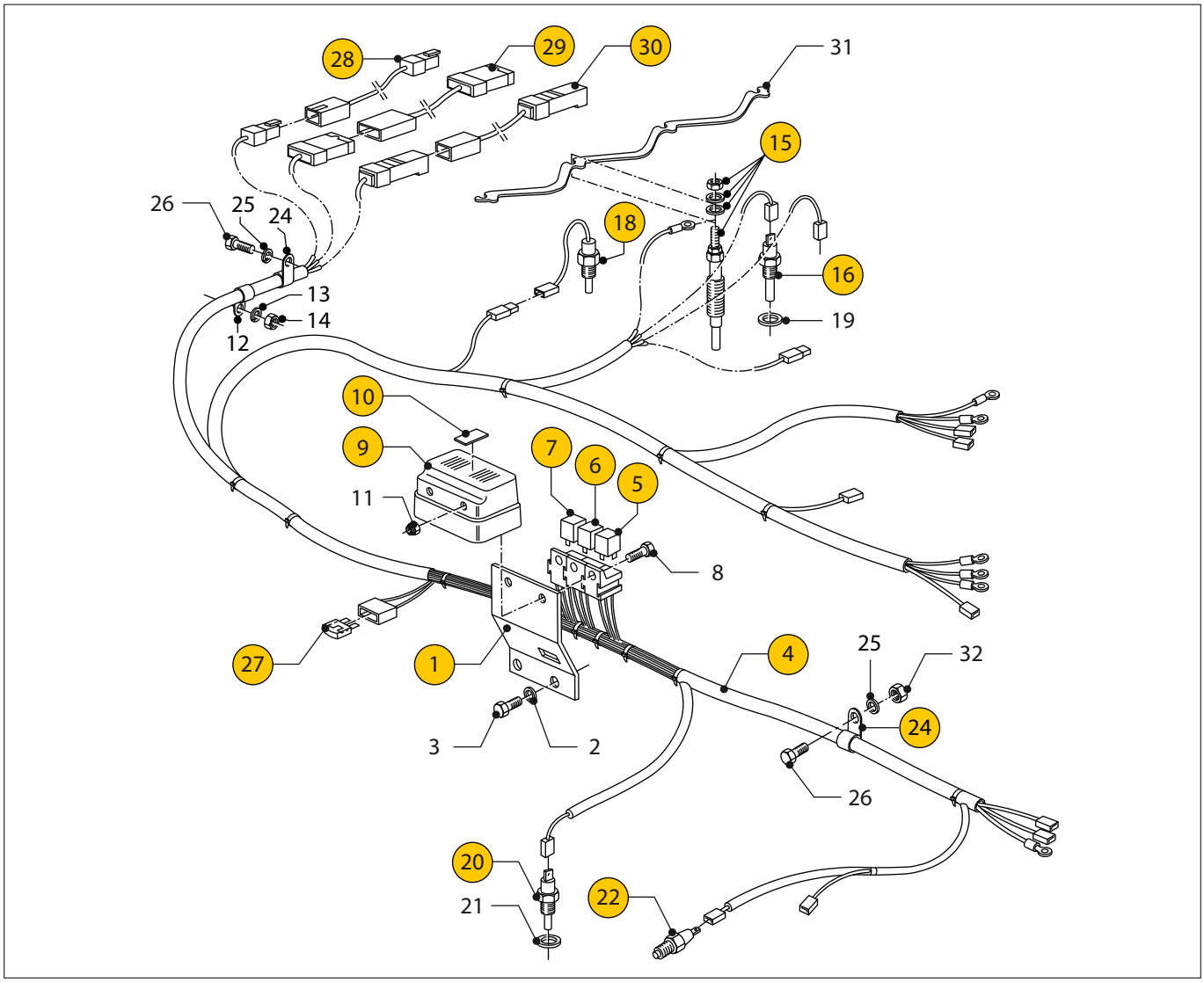

VH4.65 VH4.80 **Bedrading** **Wiring**

pos.	qty	part	benaming	description
21	1	**STM2019**	Afdichtring M18	Seal washer M18
22	1	**STM6267**	Oliedruk schakelaar	Oilpressure switch
24	2	**STM6305**	Klem	Clamp
25	2	**STM1056**	Veerring M8	Spring washer M8
26	2	**STM3355**	Bout M8x20	Bolt M8x20
27	1	**08-01420**	ATO Zekering 20 A	ATO Fuse 20 A
28	1	**MPKA02**	Tussenkabel A, 2 mtr., Grijs 6 polig	Intermediate cable A, 2 mtr., Grey 6 pole
	1	**MPKA04**	Tussenkabel A, 4 mtr., Grijs 6 polig	Intermediate cable A ,4 mtr., Grey 6 pole
	1	**MPKA06**	Tussenkabel A, 6 mtr., Grijs 6 polig	Intermediate cable A, 6 mtr., Grey 6 pole
	1	**MPKA12**	Tussenkabel A, 12 mtr., Grijs 6 polig	Intermediate cable A, 12 mtr., Grey 6 pole
29	1	**MPKB02**	Tussenkabel B, 2 mtr., Zwart 6 polig	Intermediate cable B, 2 mtr., Black 6 pole
	1	**MPKB04**	Tussenkabel B, 4 mtr., Zwart 6 polig	Intermediate cable B, 4 mtr., Black 6 pole
	1	**MPKB06**	Tussenkabel B, 6 mtr., Zwart 6 polig	Intermediate cable B, 6 mtr., Black 6 pole
	1	**MPKB12**	Tussenkabel B,12 mtr., Zwart 6 polig	Intermediate cable B, 12 mtr., Black 6 pole
30	1	**MPKC02**	Tussenkabel C, 2 mtr., Zwart 2 polig	Intermediate cable C, 2 mtr., Black 2 pole
	1	**MPKC04**	Tussenkabel C, 4 mtr., Zwart 2 polig	Intermediate cable C, 4 mtr., Black 2 pole
	1	**MPKC06**	Tussenkabel C, 6 mtr., Zwart 2 polig	Intermediate cable C, 6 mtr., Black 2 pole
	1	**MPKC12**	Tussenkabel C, 12 mtr., Zwart 2 polig	Intermediate cable C, 12 mtr., Black 2 pole
31	1	**STM4973**	Strip	Plate
32	1	**STM2005**	Moer M8	Nut M8

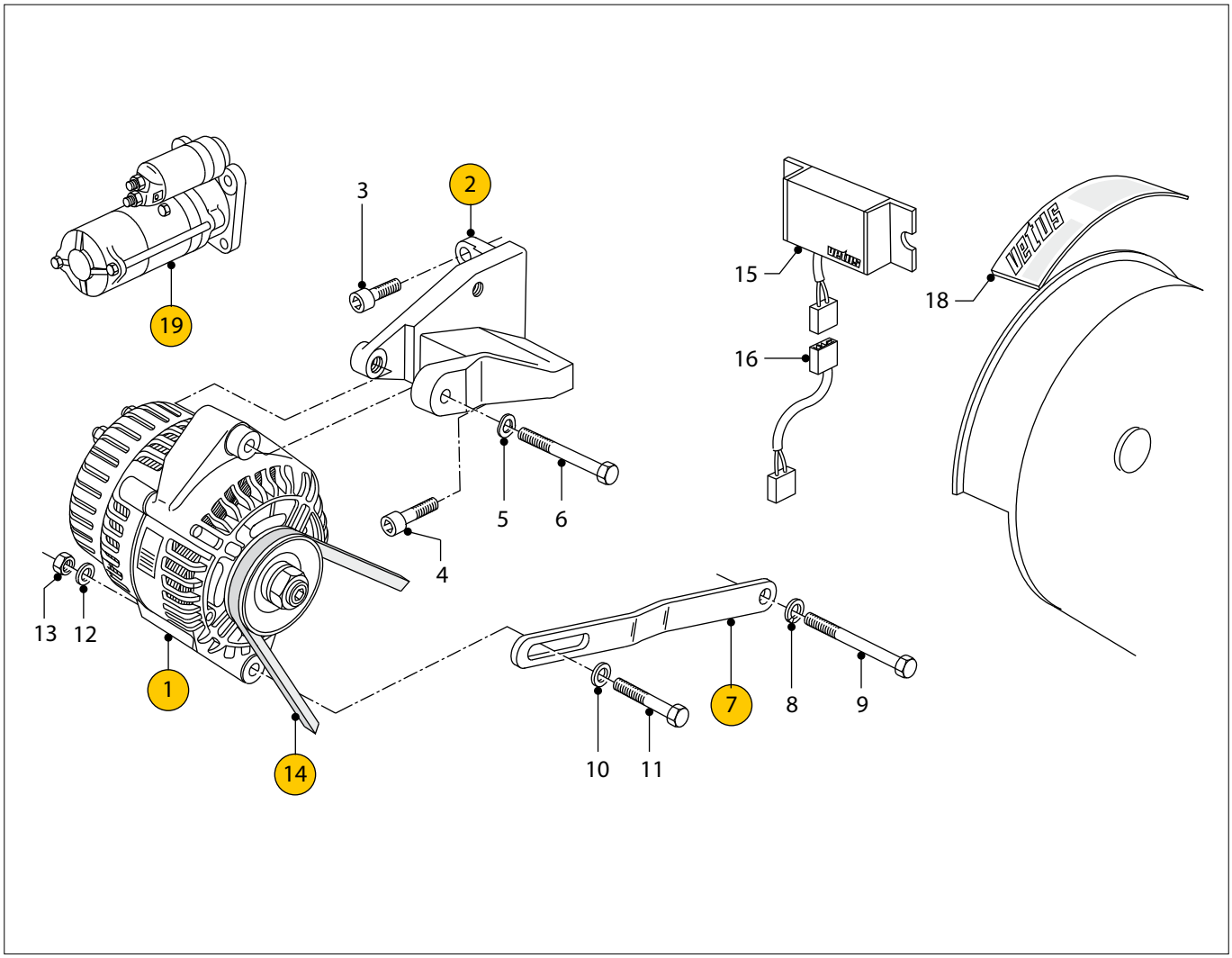

VH4.65 VH4.80 **Dynamo + startmotor** **Alternator + starter**

pos.	qty	part	benaming	description
1	1	**STM8660**	Dynamo 12 V, 90 A,1P	Alternator 12V, 90A, 1P
2	1	**STM4507**	Steun	Support
3	1	**STM4525**	Inbusbout lage kop M8x25	Allen screw low head M8x25
4	2	**STM8829**	Inbusbout M8x25	Allen screw M8x25
5	1	**STM1019**	Gegolfde veerring M8	Wave spring washer M8
6	1	**STM8331**	Bout M8x80	Bolt M8x80
7	1	**STM4508**	Spansteun	Tension support
8	1	**STM1056**	Veerring M8	Spring washer M8
9	1	**STM8126**	Bout M8x90	Bolt M8x90
10	1	**STM3749**	Ring M8	Washer M8
11	1	**STM6561**	Bout M8x50	Bolt M8x50
12	1	**STM1019**	Gegolfde veerring M8	Wave spring washer M8
13	1	**STM2005**	Moer M8	Nut M8
14	1	**STM4509**	V-snaar 10x1200	V-belt 10x1200
15	1	**STM9080**	Regelaar 12 V, OPTN06	Regulator 12 V, OPTN06
16	1	**STM8082**	Verlengkabel OPTN08	Wiring loom OPTN08
18	1	**STM4565**	Plakker VH4.65	Sticker VH4.65
	1	**STM4580**	Plakker VH4.80	Sticker VH4.80
19	1	**STM4974**	Startmotor 12 V - 2,0 kW	Starter 12 V - 2,0 kW

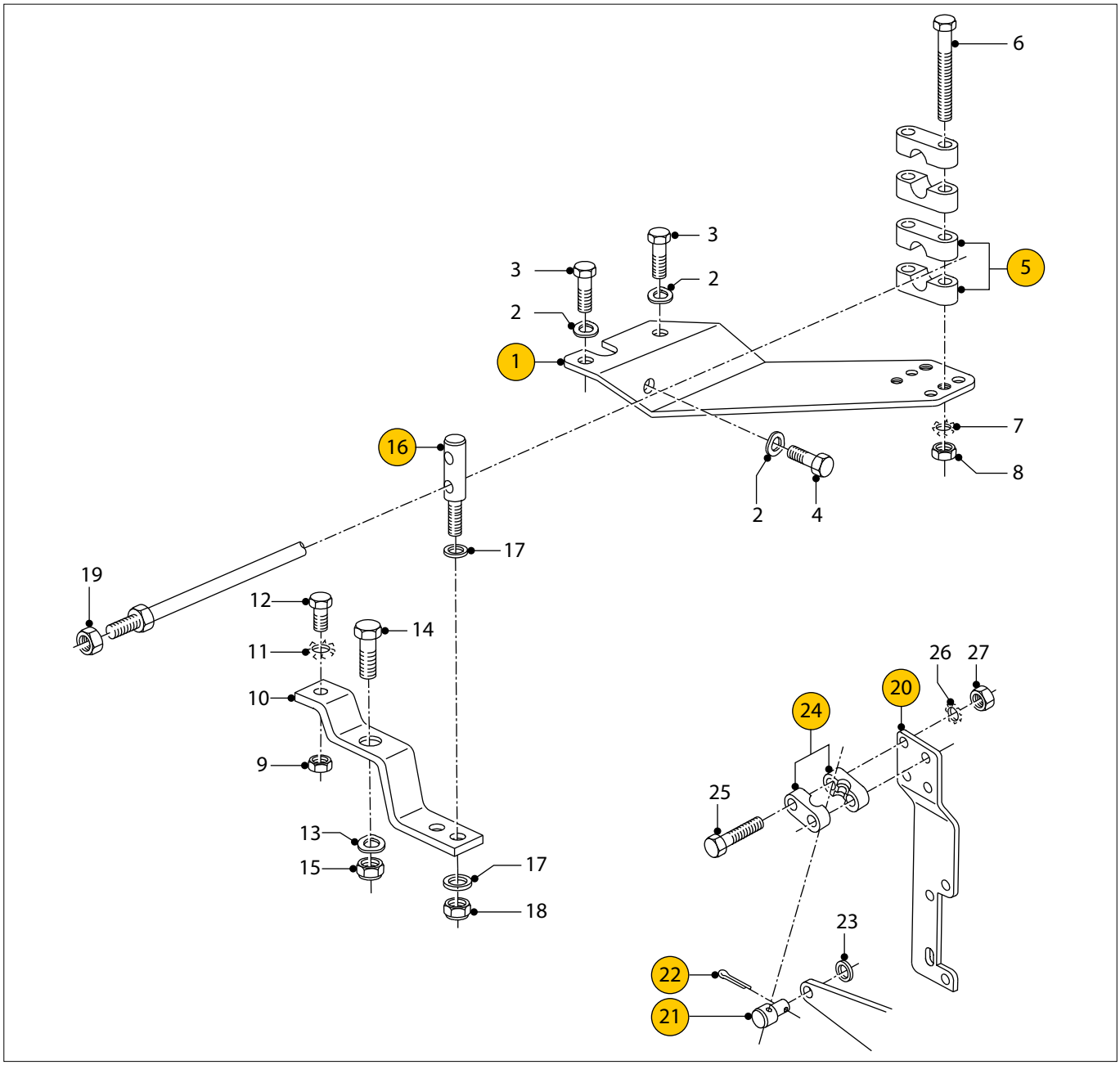

VH4.65 VH4.80 **Bediening** **Controlls**

pos.	qty	part	benaming	description
1	1	**STM4551**	Gaskabelsteun	Throttle cable control support
2	3	**STM1025**	Gegolfde veerring M6	Wave spring washer M6
3	2	**STM1030**	Bout M6x20	Bolt M6x20
4	1	**STM1029**	Bout M6x12	Bolt M6x12
5	2	**STM1703**	Kabelklem	Cableclamp
6	2	**STM1907**	Bout M5x40	Bolt M5x40
7	2	**STM1707**	Sterring M5	Washer external teeth M5
8	2	**STM1705**	Moer M5	Nut M5
9	1	**STM1705**	Moer M5	Nut M5
10	1	**STM4550**	Hefboom	Lever
11	1	**STM1707**	Sterring M5	Washer external teeth M5
12	1	**STM9063**	Bout M5x10	Bolt M5x10
13	1	**STM1019**	Gegolfde veerring M8	Wave spring washer M8
14	1	**STM3355**	Bout M8x20	Bolt M8x20
15	1	**STM6533**	Zelfborgende moer M8	Nyloc nut M8
16	1	**STM1902**	Gaskabelnippel AB39 4-6395	Throttle nipple AB39 4-6395

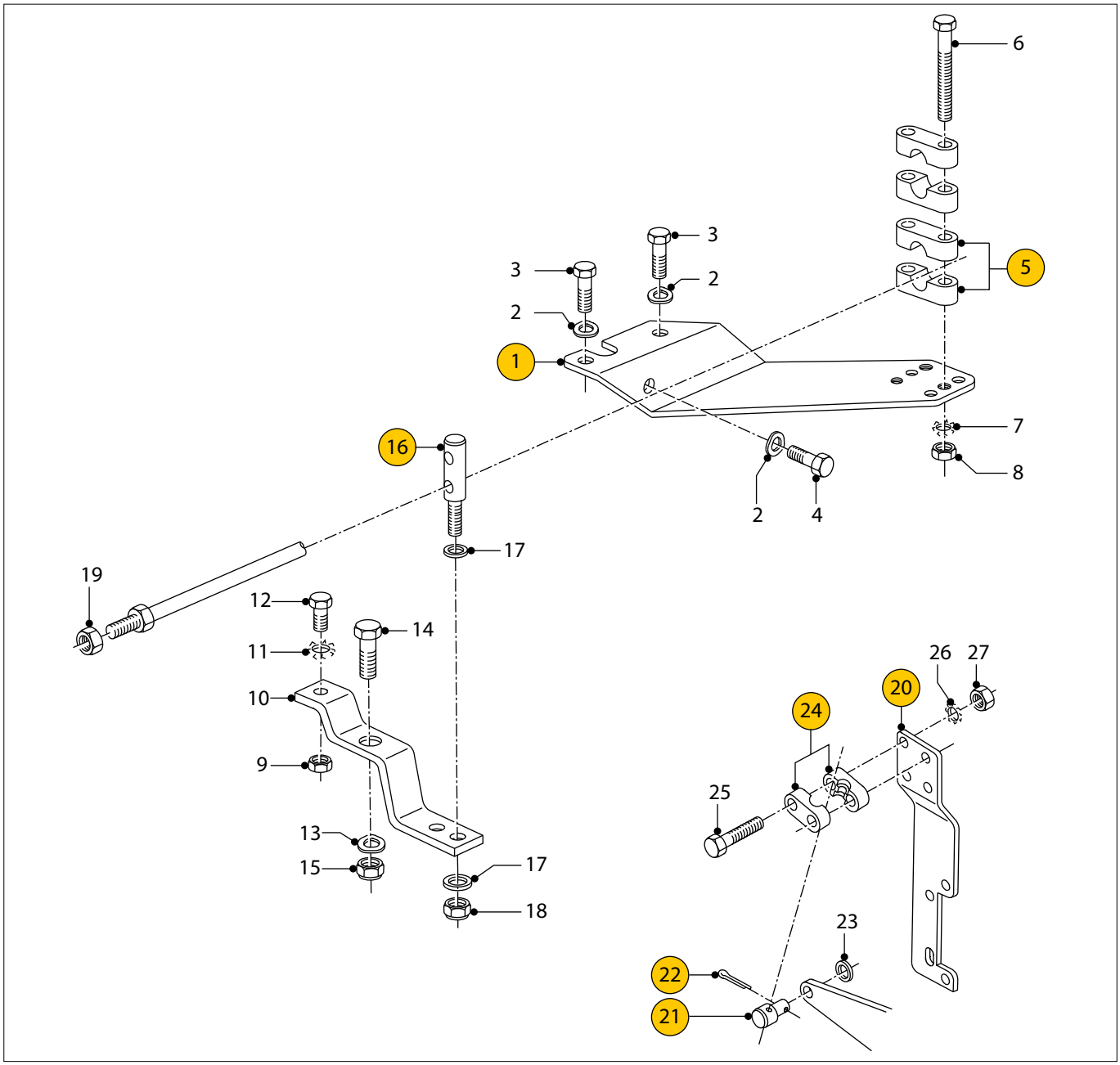

VH4.65 VH4.80 **Bediening** **Controlls**

pos.	qty	part	benaming	description
17	2	**STM1807**	Ring M6	Washer M6
18	1	**STM8129**	Zelfborgende moer M6	Nyloc nut M6
19	1	**STM6568**	Moer 10-32UNF	Nut 10-32UNF
20	1	**STM1851**	Schakelkabelsteun HBW	Switch cable support HBW
21	1	**STM1806**	Kabelnippel	Nipple
22	1	**STM1808**	Splitpen 2x25	Split pin 2x25
23	1	**STM1807**	Ring M6	Washer M6
24	1	**STM1703**	Kabelklem	Cable clamp
25	2	**STM1704**	Bout M5x25	Bolt M5x25
26	2	**STM1707**	Sterring M5	Washer external teeth M5
27	2	**STM1705**	Moer M5	Nut M5

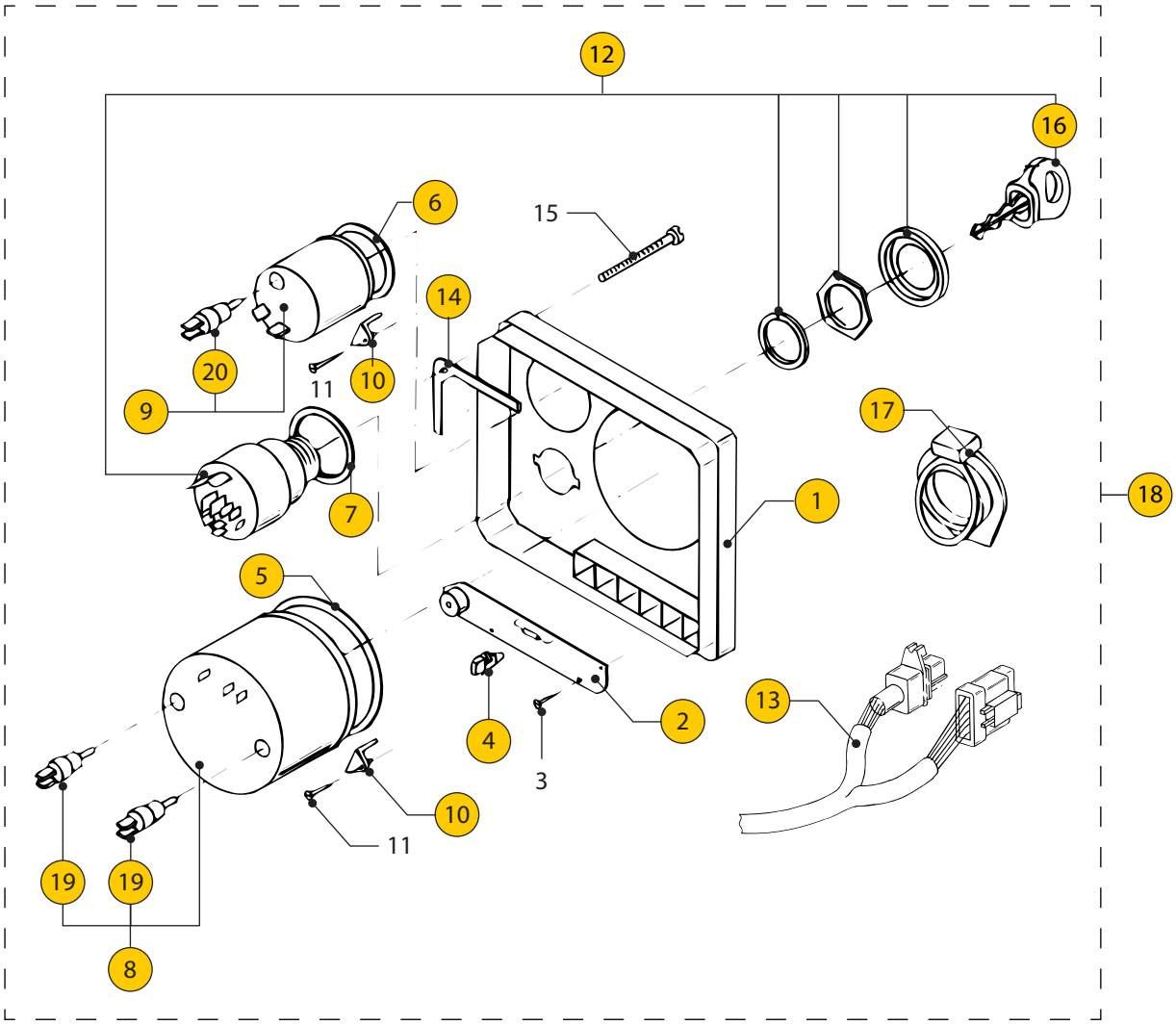

VH4.65 VH4.80 **Instrumentenpaneel model '22'** **Instrument panel model '22'**

pos.	qty	part	benaming	description
1	1	**STM9186**	Paneel incl. frontfolie	Panel incl. overlay
2	1	**08-01351**	Print MP20, 21, 22 cpl. 12 V/24 V	PCB MP20, 21, 22 cpl. 12 V/24 V
3	4	**P2295RKP**	Plaatschroef	Screw
4	6	**STM9169**	Gloeilamp 12 V	Bulb 12 V
	6	**STM9210**	Gloeilamp 24 V	Bulb 24 V
5	1	**STM9170**	Pakking	Gasket
6	1	**STM9171**	Pakking	Gasket
7	1	**STM9172**	Pakking	Gasket
8	1	**TACHB4000**	Toeren/urenteller, zwart, 0-4000 rpm	Tachometer/hour counter, black, 0-4000 rpm
	1	**TACHN4000**	Toeren/urenteller, beige, 0-4000 rpm	Tachometer/hour counter, beige, 0-4000 rpm
	1	**TACHB5000**	Toeren/urenteller, zwart, 0-5000 rpm	Tachometer/hour counter, black, 0-5000 rpm
9	1	**VLT12B**	Voltmeter, zwart, 12 V	Voltmeter, black, 12 V
	1	**VLT12N**	Voltmeter, beige, 12 V	Voltmeter, beige, 12 V
	1	**VLT24B**	Voltmeter, zwart, 24 V	Voltmeter, black, 24 V
	1	**VLT24N**	Voltmeter, beige, 24 V	Voltmeter, beige, 24 V
10	6	**PA6488**	Beugel	Bracket
11	6	**P35134RKP**	Plaatschroef	Screw
12	1	**STM9215**	Contactslot + sleutel	Key switch + key

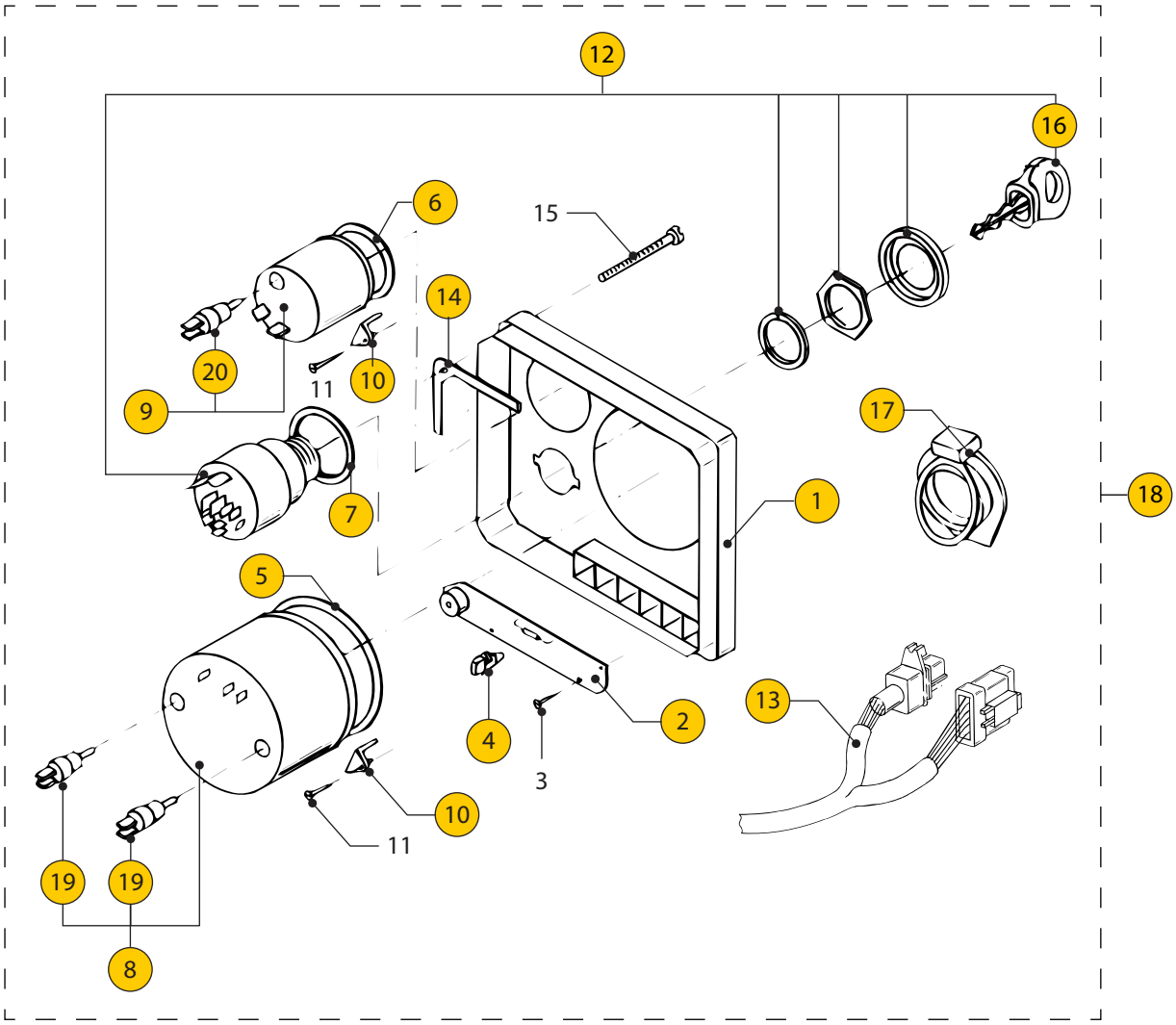

VH4.65 VH4.80 **Instrumentenpaneel model '22'** **Instrument panel model '22'**

pos.	qty	part	benaming	description
13	1	**MP35374**	Paneelbedrading	Wiring
14	1	**STM6982**	Pakking	Gasket
15	4	**P35254ZKP**	Plaatschroef	Screw
16	1	**STM9214**	Sleutel	Key
17	1	**STM9188**	Contactslot deksel	Key switch cover
18	1	**MPA22....**	Instr.paneel cpl. zwarte instr. 0-4000 rpm 12 V	Instr.panel cpl. black instr. 0-4000 rpm 12 V
	1	**MPA22....**	Instr.paneel cpl. beige instr. 0-4000 rpm 12 V	Instr.panel cpl. beige instr. 0-4000 rpm 12 V
	1	**MPA22....**	Instr.paneel cpl. zwarte instr. 0-4000 rpm 24 V	Instr.panel cpl. black instr. 0-4000 rpm 24 V
	1	**MPA22....**	Instr.paneel cpl. beige instr. 0-4000 rpm 24 V	Instr.panel cpl. beige instr. 0-4000 rpm 24 V
	1	**MPA22....**	Instr.paneel cpl. zwarte instr. 0-5000 rpm 12 V	Instr.panel cpl. black instr. 0-5000 rpm 12 V
19	2	**SET40131**	Gloeilamp 12 V	Bulb 12 V
	2	**SET40132**	Gloeilamp 24 V	Bulb 24 V
20	1	**SET0190**	Gloeilamp 12 V	Bulb 12 V
	1	**SET0191**	Gloeilamp 24 V	Bulb 24 V

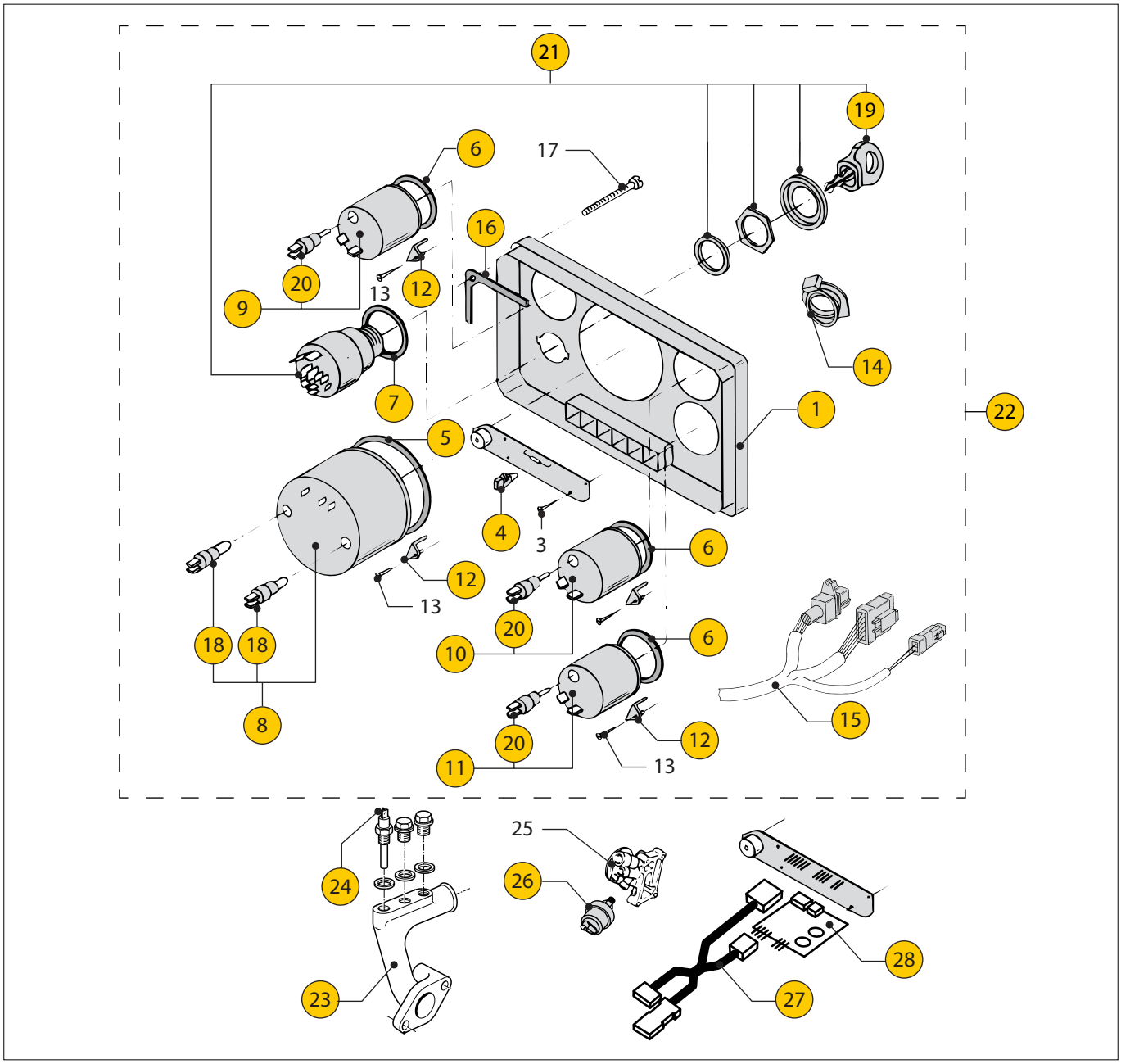

VH4.65 VH4.80 **Instrumentenpaneel model '34'** **Instrument panel model '34'**

pos.	qty	part	benaming	description
1	1	**STM6571**	Paneel incl. frontfolie	Panel incl. overlay
2	1	**08-01351**	Print MP34 cpl. 12 V / 24 V	PCB MP34 cpl. 12 V / 24 V
3	4	**P2295RKP**	Plaatschroef	Screw
4	6	**STM9169**	Gloeilamp 12 V	Bulb 12 V
	6	**STM9210**	Gloeilamp 24 V	Bulb 24 V
5	1	**STM9170**	Pakking	Gasket
6	3	**STM9171**	Pakking	Gasket
7	1	**STM9172**	Pakking	Gasket
8	1	**TACHB4000**	Toeren/urenteller, zwart, 0-4000 rpm	Tachometer/hour counter, black, 0-4000 rpm
	1	**TACHN4000**	Toeren/urenteller, beige, 0-4000 rpm	Tachometer/hour counter, beige, 0-4000 rpm
	1	**TACHB5000**	Toeren/urenteller, zwart, 0-5000 rpm	Tachometer/hour counter, black, 0-5000 rpm
9	1	**VLT12B**	Voltmeter, zwart, 12 V	Voltmeter, black, 12 V
	1	**VLT12N**	Voltmeter, beige, 12 V	Voltmeter, beige, 12 V
	1	**VLT24B**	Voltmeter, zwart, 24 V	Voltmeter, black, 24 V
	1	**VLT24N**	Voltmeter, beige, 24 V	Voltmeter, beige, 24 V
10	1	**TEMPB**	Temperatuurmeter, zwart, 40-120°C 12 V	Temperature gauge, black, 40-120°C, 12 V

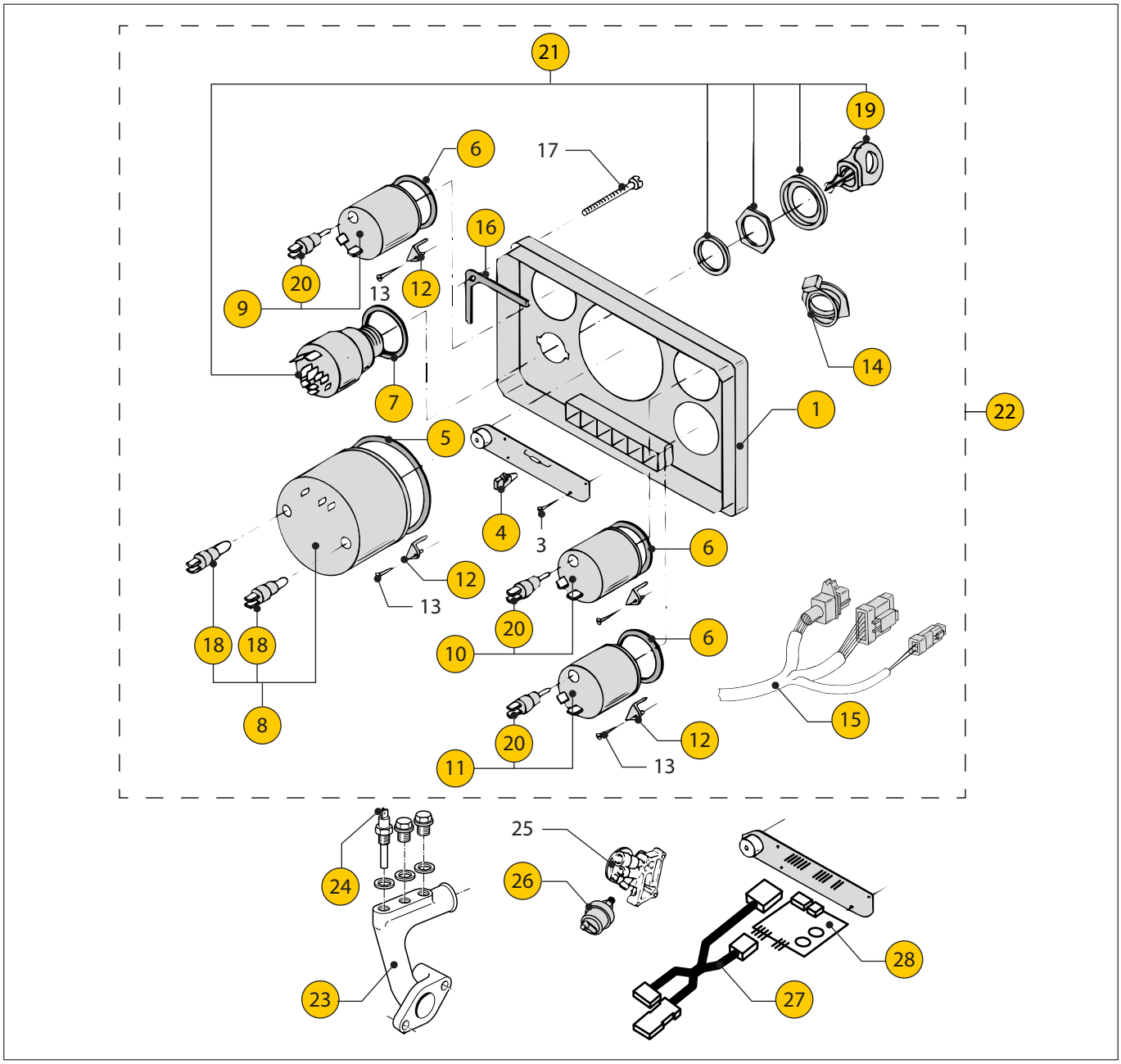

VH4.65 VH4.80 **Instrumentenpaneel model '34'** **Instrument panel model '34'**

pos.	qty	part	benaming	description
10	1	**TEMPN**	Temperatuurmeter, beige, 40-120°C 12 V	Temperature gauge, beige, 40-120°C, 12 V
	1	**TEMPB**	Temperatuurmeter, zwart, 40-120°C 24 V	Temperature gauge, black, 40-120°C, 24 V
	1	**TEMPN**	Temperatuurmeter, beige, 40-120°C 24 V	Temperature gauge, beige, 40-120°C, 24 V
11	1	**OILB**	Oliedrukmeter, zwart, 0-8 bar, 12 V	Oil pressure gauge, black, 0-8 bar, 12 V
	1	**OILN**	Oliedrukmeter, beige, 0-8 bar, 12 V	Oil pressure gauge, beige, 0-8 bar, 12 V
	1	**OILB**	Oliedrukmeter, zwart, 0-8 bar, 24 V	Oil pressure gauge, black, 0-8 bar, 24 V
	1	**OILN**	Oliedrukmeter, beige, 0-8 bar, 24 V	Oil pressure gauge, beige, 0-8 bar, 24 V
12	6	**PA6488**	Beugel	Bracket
13	6	**P35134RKP**	Plaatschroef	Screw
14	1	**STM9188**	Contactslot deksel	Key switch cover
15	1	**MP35374**	Paneelbedrading	Wiring
16	1	**STM9181**	Pakking	Gasket
17	4	**P35254ZKP**	Plaatschroef	Screw
18	2	**SET40131**	Gloeilamp 12 V	Bulb 12 V
	2	**SET40132**	Gloeilamp 24 V	Bulb 24 V
19	1	**STM9214**	Sleutel	Key

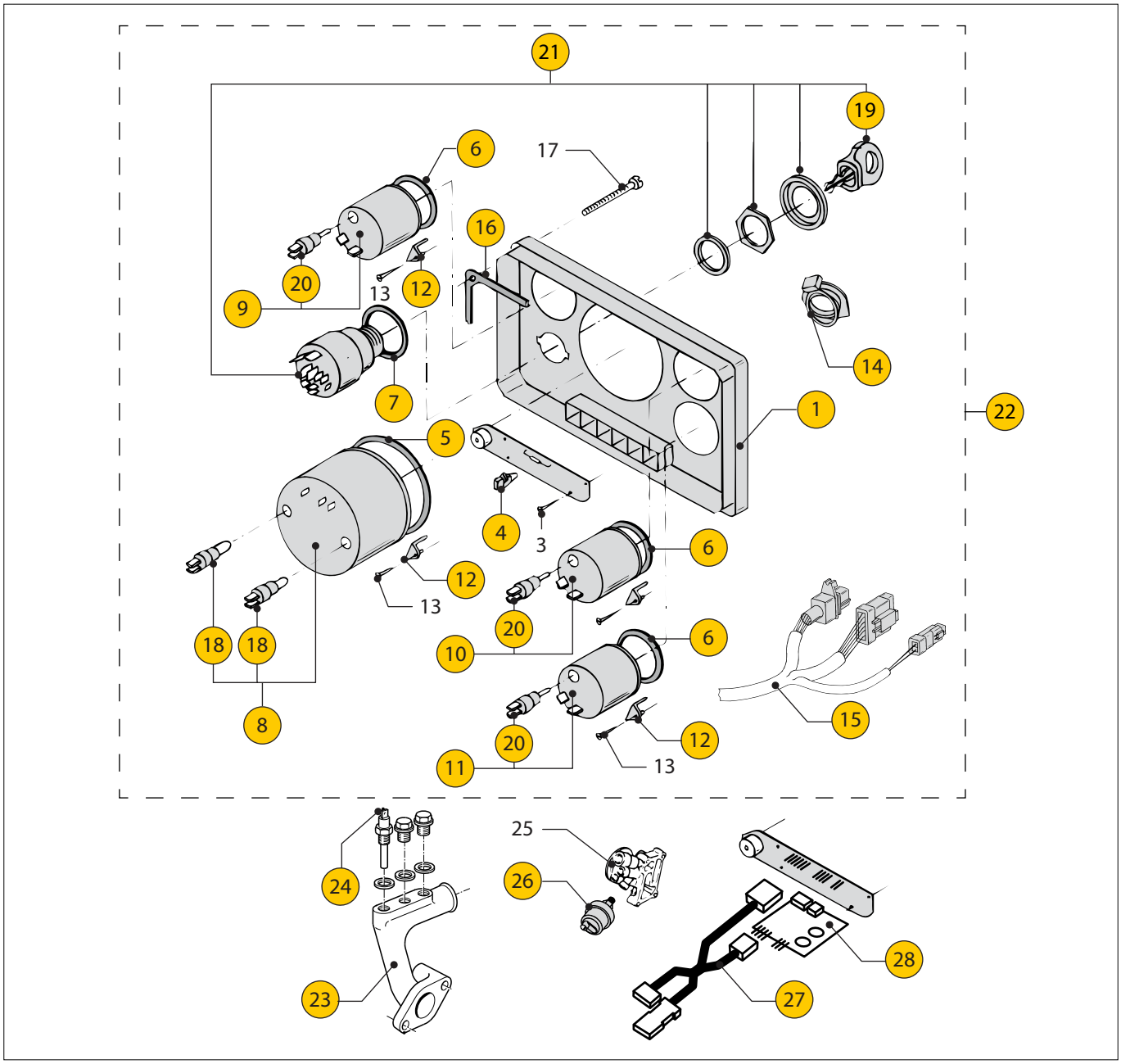

VH4.65 VH4.80 **Instrumentenpaneel model '34'** **Instrument panel model '34'**

pos.	qty	part	benaming	description
20	1	**SET0190**	Gloeilamp 12 V	Bulb 12 V
	1	**SET0191**	Gloeilamp 24 V	Bulb 24 V
21	1	**STM9215**	Contactslot + sleutel	Key switch + key
22	1	**MPA34....**	Instr.paneel cpl. zwarte instr. 0-4000 rpm 12 V	Instr.panel cpl. black instr. 0-4000 rpm 12 V
	1	**MPA34....**	Instr.paneel cpl. beige instr. 0-4000 rpm 12 V	Instr.panel cpl. beige instr. 0-4000 rpm 12 V
	1	**MPA34....**	Instr.paneel cpl. zwarte instr. 0-4000 rpm 24 V	Instr.panel cpl. black instr. 0-4000 rpm 24 V
	1	**MPA34....**	Instr.paneel cpl. beige instr. 0-4000 rpm 24 V	Instr.panel cpl. beige instr. 0-4000 rpm 24 V
	1	**MPA34....**	Instr.paneel cpl. zwarte instr. 0-5000 rpm 12 V	Instr.panel cpl. black instr. 0-5000 rpm 12 V
23	1	**STM4540**	Water uitlaatbocht	Water outlet elbow
24	1	**TEMPSR120**	Binnenwater temperatuur zender M14x1,5 12-24 V 40-120˚C	Temp. sender coolant M14x1,5 12-24 V 40-120˚C
25	1	**STM4907**	Oliefilterhuis	Oilfilter case
26	1	**CT40083**	Oliedrukzender	Sender oil pressure
27	1	**MPVB2**	Verloopkabel (MPVB2)	Cable (MPVB2)
28	1	**STM6911**	Interface	Interface

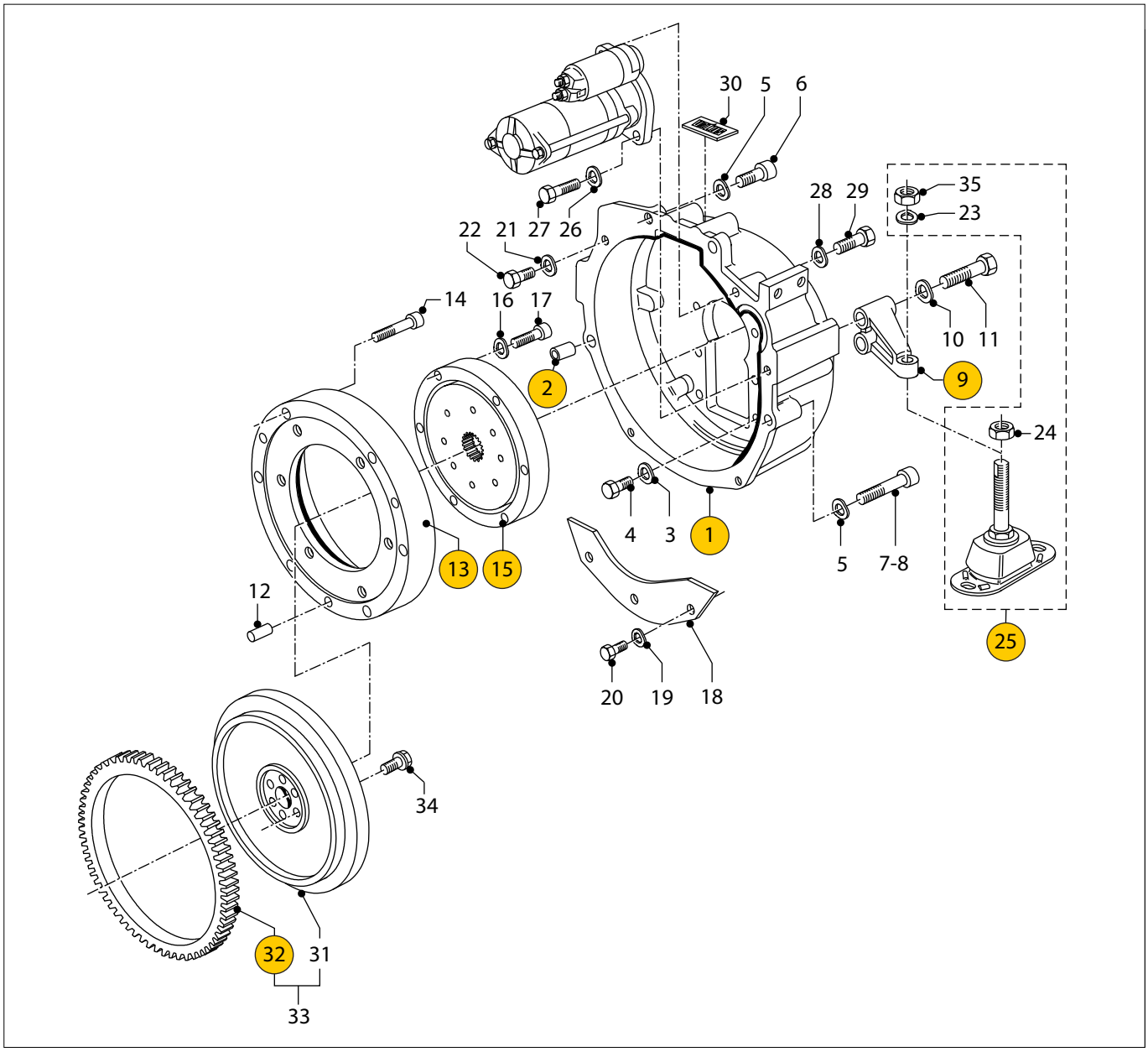

VH4.65 VH4.80 **Vliegwielhuis** **Flywheel housing**

pos.	qty	part	benaming	description
1	1	**STM4511**	Vliegwielhuis ø 88	Flywheel housing ø 88
	1	**STM4512**	Vliegwielhuis ø 92	Flywheel housing ø 92
	1	**STM4514**	Vliegwielhuis ø 209	Flywheel housing ø 209
2	2	**STM4715**	Pasbus	Bush
3	6	**STM1019**	Gegolfde veerring M8	Wave spring washer M8
4	6	**STM1610**	Bout M8x25 HSW125H, PRM150, TMC260	Bolt M8x25
	6	**STM4016**	Bout M10x20 TM345A, TM345H	Bolt M10x20
	6	**STM4013**	Bout M10x30, HSW250A, HSW250H, HBW250, HBW250A	Bolt M10x30
5	4	**STM4061**	Gegolfde veerring M10	Wave spring washer M10
6	2	**STM4687**	Inbusbout M10x1,25x35	Allen screw M10x1,25x35
7	1	**STM4528**	Inbusbout M10x1,25x90	Allen screw M10x1,25x90
8	1	**STM4528**	Inbusbout M10x1,25x90	Allen screw M10x1,25x90
9	2	**STM7584**	Motorsteun SB-BB	Engine support SB-PS
10	4	**STM4056**	Gegolfde veerring M12	Wave spring washer M12
11	4	**STM7595**	Bout M12x1,75x65	Bolt M12x1,75x65
12	3	**STM4987**	Paspen	Pin

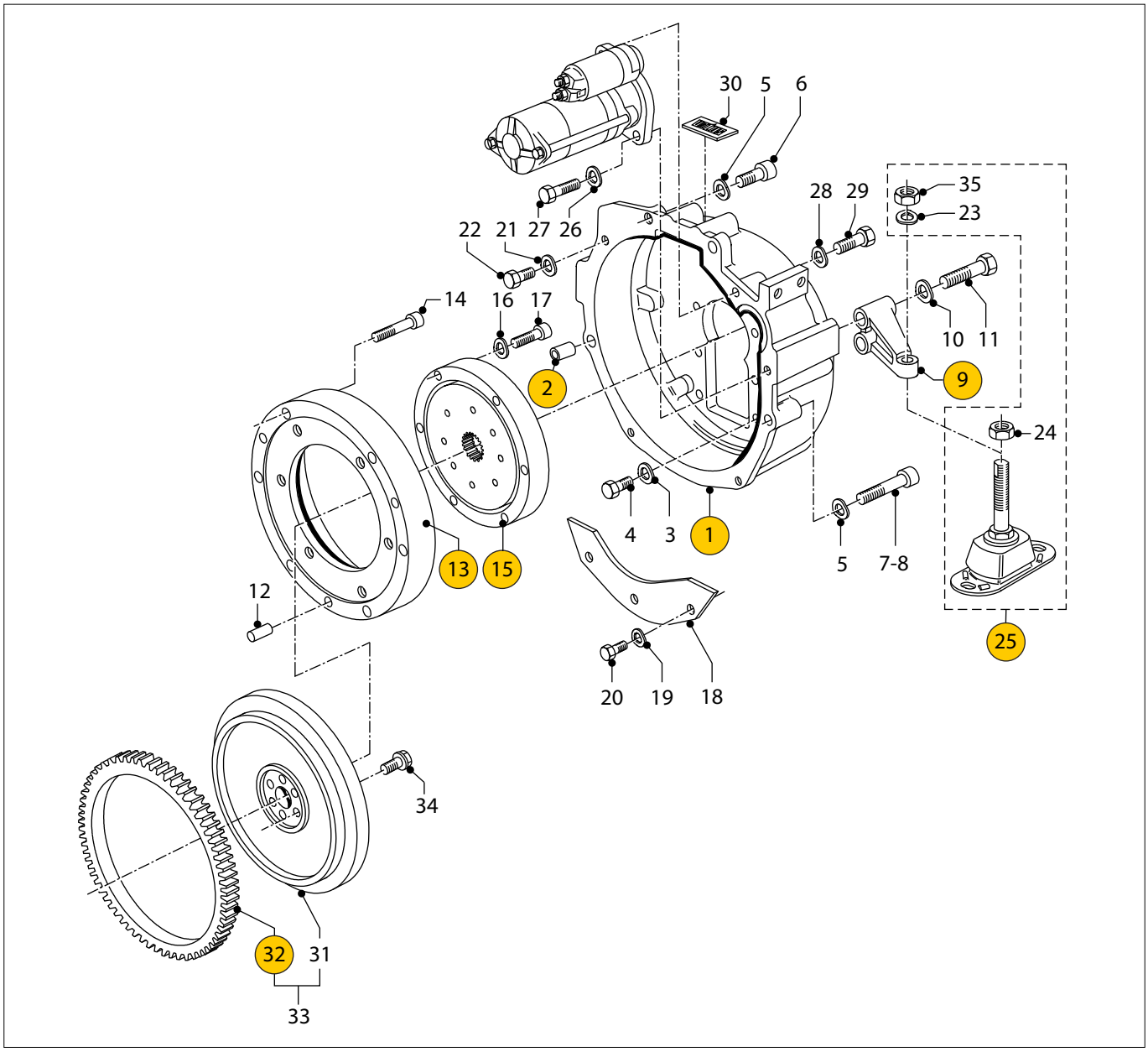

VH4.65 VH4.80 **Vliegwielhuis** **Flywheel housing**

pos.	qty	part	benaming	description
13	1	**STM4510**	Vliegwiel verzwaring	Flywheel ring
14	6	**STM4526**	Inbusbout M8x55	Allen screw M8x55
15	1	**STM8508**	Demperplaat DIN Z=10	Damper plate DIN Z=10
	1	**STM8522**	Demperplaat SAE Z=26	Damper plate SAE Z=26
16	6	**STM1019**	Gegolfde veerring M8	Wave spring washer M8
17	6	**STM6539**	Inbusbout M8x40	Allen screw M8x55
18	1	**STM4515**	Afdichtplaat	Cover
19	2	**STM1025**	Gegolfde veerring M6	Wave spring waser M6
20	2	**STM1024**	Bout M6x15	Bolt M6x15
21	1	**STM1019**	Gegolfde veerring M8	Wave spring waser M8
22	1	**STM4527**	Tapbout M8x10	Bolt M8x10
23	1	**STM4011**	Gegolfde veerring M16	Wave spring washer M16
24	1	**STM4641**	Moer M16x1,5	Nut M16x1,5
25	2	**HY100**	Trillingdemper HY100	Engine mount HY100
26	1	**STM1019**	Gegolfde veerring M8	Wave spring washer M8
27	1	**STM2261**	Bout M8x40	Bolt M8x40
28	1	**STM4061**	Gegolfde veerring M10	Wave spring washer M10
29	1	**STM4687**	Inbusbout M10x1,25x35	Allen screw M10x1,25x35

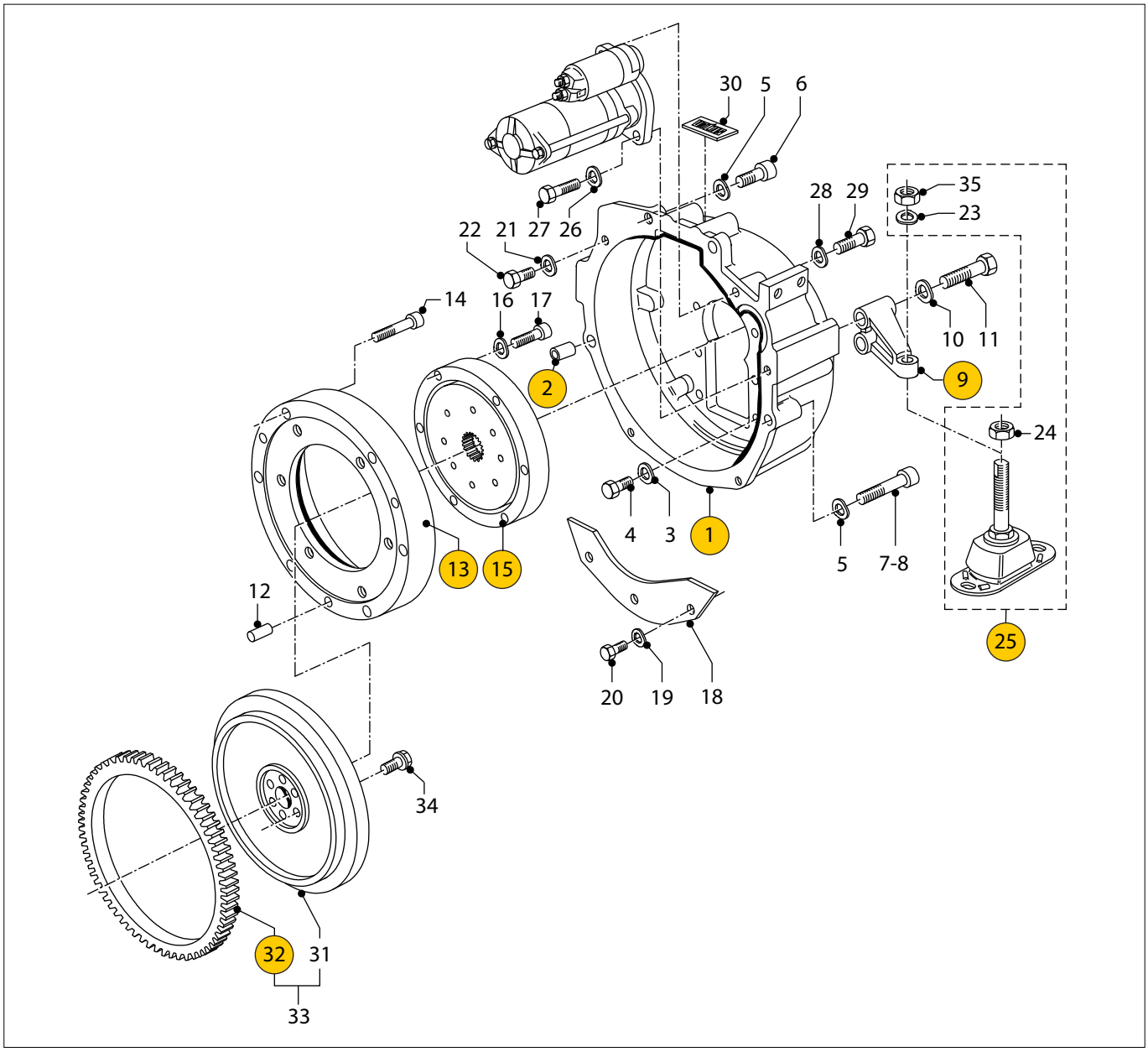

VH4.65 VH4.80 **Vliegwielhuis** **Flywheel housing**

pos.	qty	part	benaming	description
30	1	**STM1054**	Type plaatje	Model plate
31	1	**STM4975**	Vliegwiel	Flywheel
32	1	**STM4977**	Starterkrans	Gearwheel
33	1	**STM4978**	Vliegwiel + starterkrans	Flywheel + gearwheel
34	6	**STM4979**	Bout	Bolt
35	1	**STM4641**	Zelfborgende moer M16x1,5	Nyloc nut M16x1,5

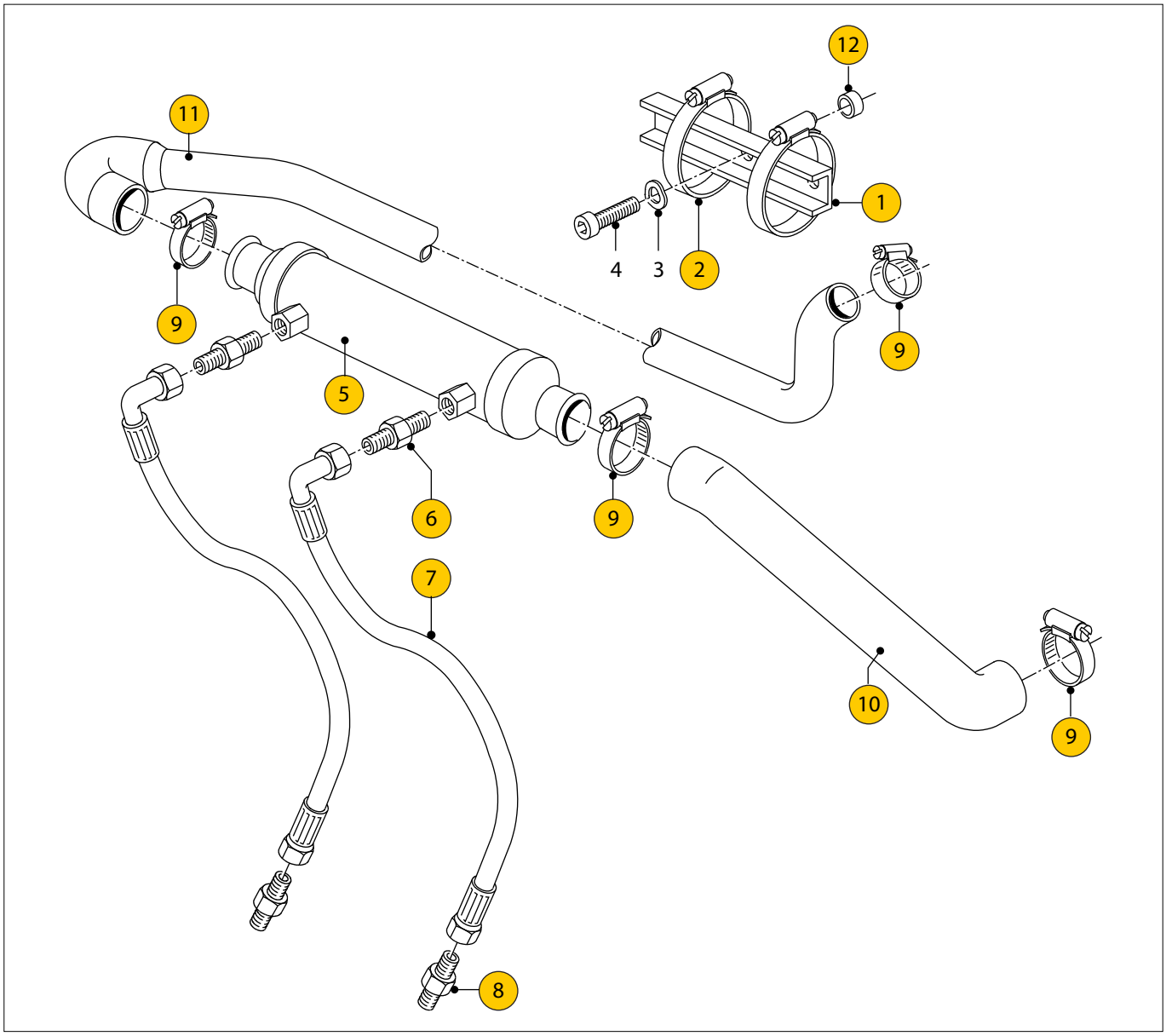

VH4.65 VH4.80 **Oliekoeler hydraulische keerkoppeling** **Oil cooler hydraulic gearbox**

pos.	qty	part	benaming	description
1	1	**STM7568**	Steun	Support
2	2	**HCS75**	Slangklem 77-95	Hose clamp 77-95
3	2	**STM1019**	Gegolfde veerring M8	Wave spring washer M8
4	2	**STM4526**	Inbusbout M8x55	Allen screw M8x55
5	1	**STM3771**	Oliekoeler 9" x ø55 - G3/8 - ø33 mm	Oil cooler 9" x ø55 - G3/8 - ø33 mm
6	2	**STM3491**	Nippel G3/8-M16	Nipple G3/8-M16
7	2	**CT50079**	Olieslang l=550	Oil hose l=550
8	2	**STM3491**	Nippel M16-G3/8, HSW-TM345	Nipple M16-G3/8, HSW-TM345
9	4	**STM3005**	Slangklem 32-44	Hose clamp 32-44
10	1	**STM4630**	Slang oliekoeler-oliekoeler	Hose oil cooler-oil cooler
11	1	**STM4631**	Slang oliekoeler-ww	Hose oil cooler-heatexchanger
12	2	**STM4537**	Bus l=30	Bush l=30

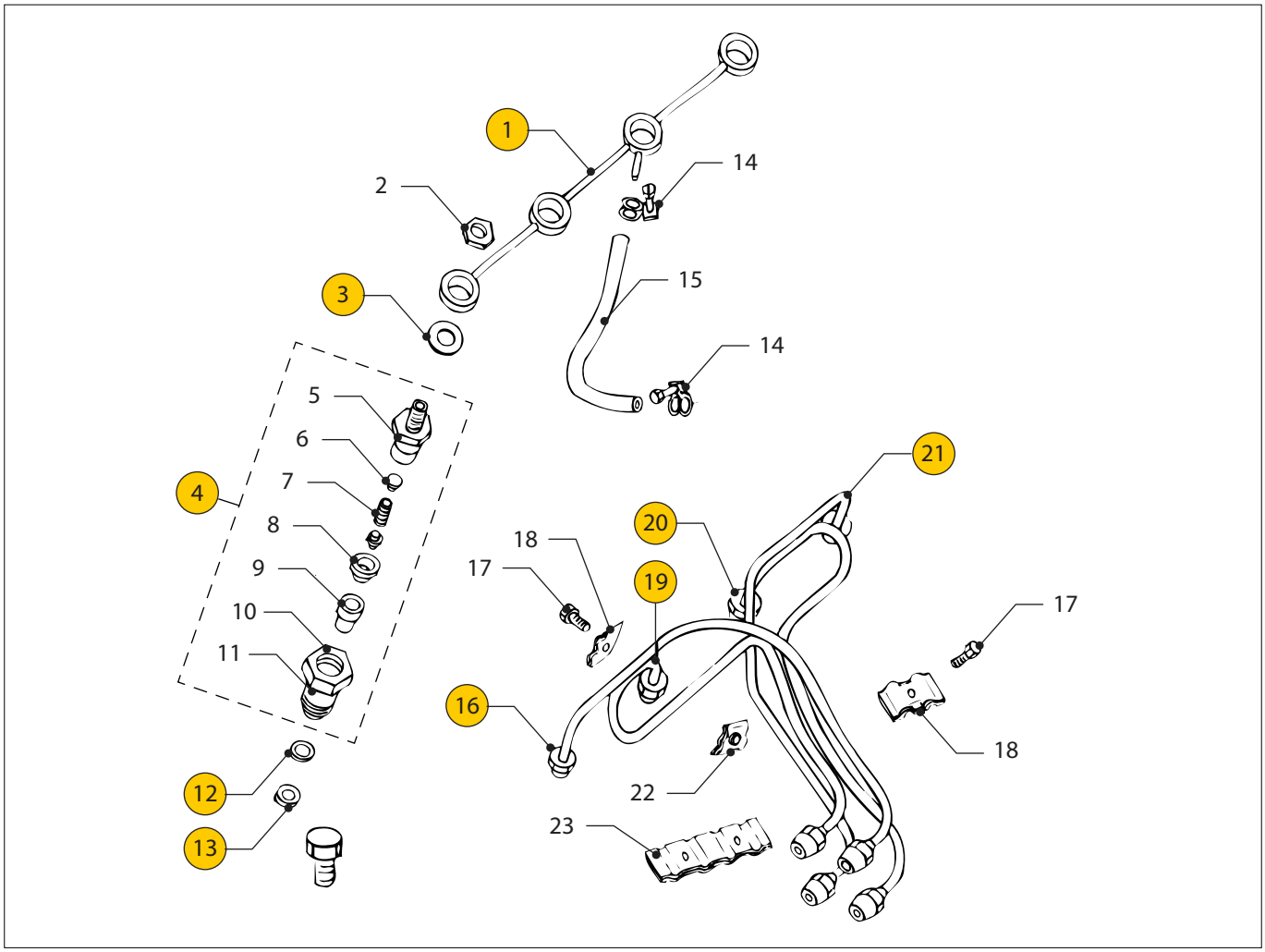

VH4.65 VH4.80 **Brandstofleidingen** **Fuel pipes**

pos.	qty	part	benaming	description
1	1	**STM4940**	Retourpijp	Return pipe
2	4	**STM4941**	Moer 12x1,5	Nut 12x1,5
3	1	**STM4942**	Pakking	Gasket
4	4	**STM4943**	Verstuiver cpl.	Nozzle cpl.
5	1	**STM4944**	Huis	Case
6	1	**STM4945**	Shim	Shim
7	1	**STM4946**	Veer	Spring
8	1	**STM4947**	Zitting	Seat
9	1	**STM4948**	Afstandhouder	Spacer
10	1	**STM4949**	Nozzle	Nozzle
11	1	**STM4950**	Moer	Nut
12	4	**STM4951**	Pakking	Gasket
13	4	**STM4952**	Pakking	Gasket
14	2	**STM4953**	Klem	Clamp
15	1	**STM4954**	Slang	Hose
16	1	**STM4955**	Pijp no.1	Pipe no.1
17	4	**STM4956**	Bout	Bolt
18	4	**STM4957**	Klem A	Clamp A
19	1	**STM4958**	Pijp no.2	Pipe no.2
20	1	**STM4959**	Pijp no.3	Pipe no.3
21	1	**STM4960**	Pijp no.4	Pipe no.4
22	2	**STM4961**	Klem B	Clamp B
23	1	**STM4962**	Klem C	Clamp C

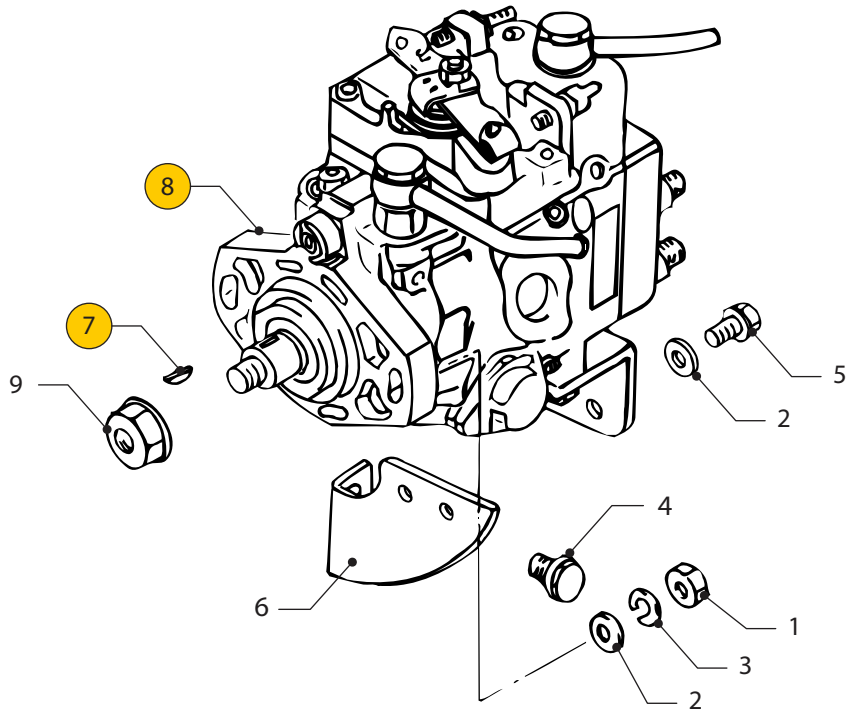

VH4.65 VH4.80 **Brandstofpomp** **Fuel pump**

pos.	qty	part	benaming	description
1	2	**STM4963**	Moer	Nut
2	4	**STM4964**	Ring-speciaal	Washer-special
3	2	**STM4965**	Veerring	Spring washer
4	2	**STM4966**	Bout	Bolt
5	2	**STM4967**	Bout	Bolt
6	1	**STM4968**	Steun	Support
7	1	**STM4969**	Spie	Key
8	1	**STM4970**	Brandstofpomp	Fuel pump
9	1	**STM4971**	Moer	Nut

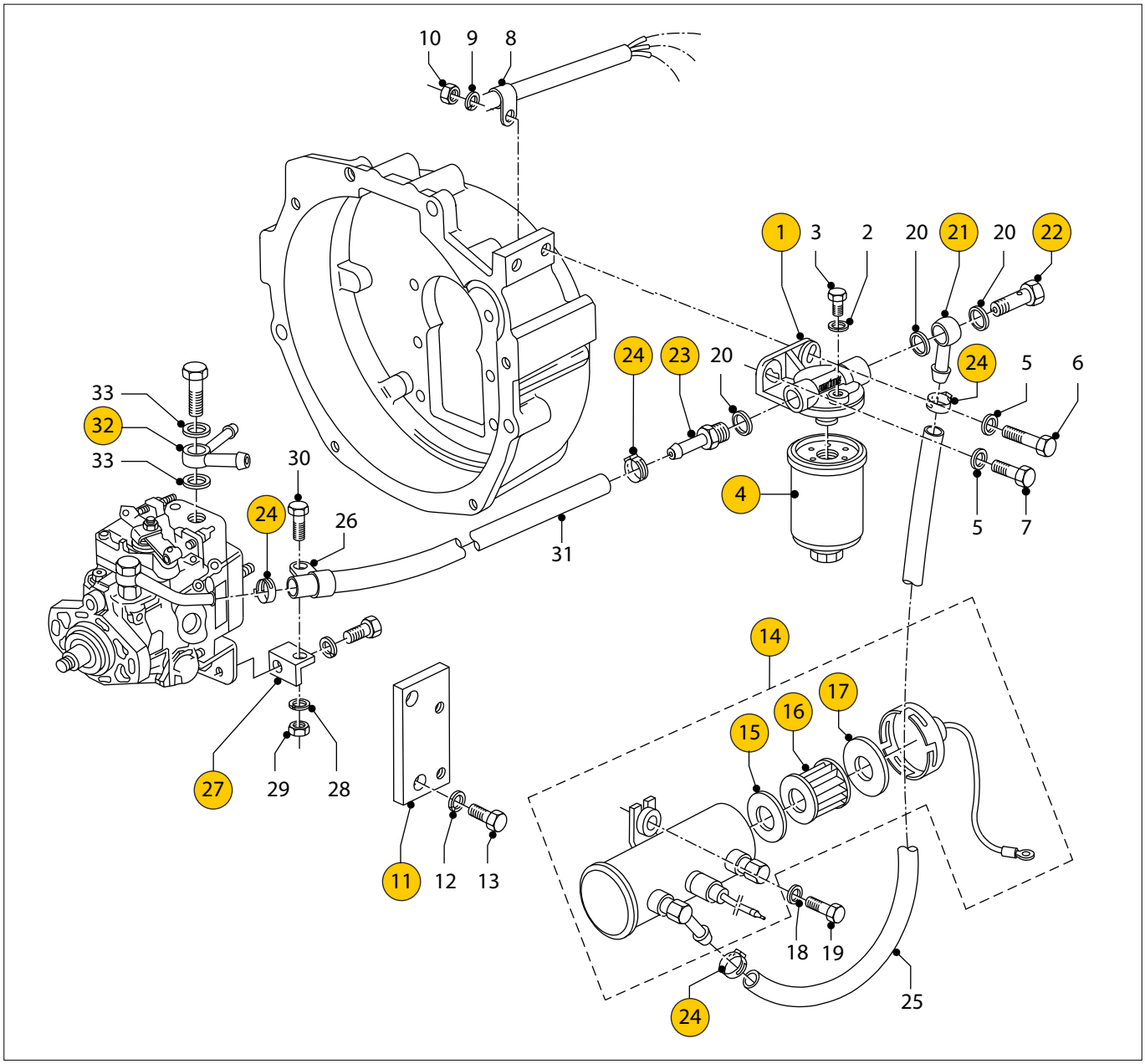

VH4.65 VH4.80 **Brandstoffilters** **Fuel filters**

pos.	qty	part	benaming	description
1	1	**STM6049**	Filterkop	Filter head
2	1	**STM3797**	Afdichtring	Seal washer
3	1	**STM3796**	Ontluchtingsschroef M8x1,25x10	Bleeding screw M8x1,25x10
4	1	**STM3690**	Brandstoffilter	Fuel filter
5	2	**STM4061**	Gegolfde veerring M10	Wave spring washer M8
6	1	**STM4062**	Bout M10x40	Bolt M10x40
7	1	**STM9003**	Bout M10x25	Bolt M10x25
8	1	**STM4616**	Klem	Clamp
9	1	**STM4014**	Veerring M10	Spring washer M10
10	1	**STM4018**	Moer M10	Nut M10
11	1	**STM4588**	Steun	Support
12	2	**STM4014**	Veerring M10	Spring washer M10
13	2	**STM9060**	Bout M10x1,25x20	Bolt M10x1,25x20
14	1	**STM4049**	Electrische brandstofopvoerpomp	Electrical fuel lift pump
15	1	**STM4038**	Pakking	Gasket
16	1	**STM4050**	Filterelement	Filter element
17	1	**STM4037**	Pakking	Gasket

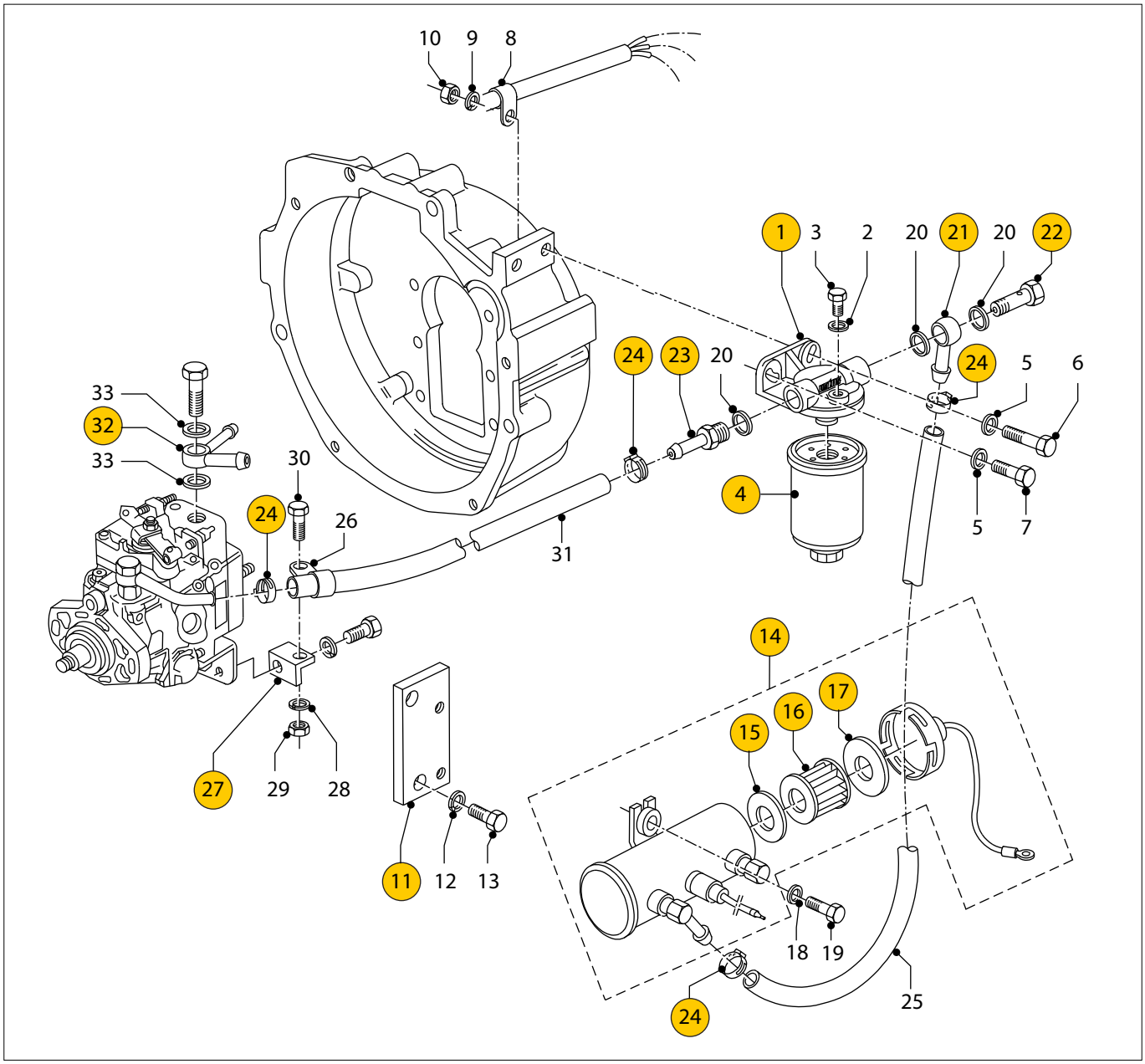

VH4.65 VH4.80 **Brandstoffilters** **Fuel filters**

pos.	qty	part	benaming	description
18	2	**STM1025**	Gegolfde veerring M6	Wave spring washer M6
19	2	**STM1030**	Bout M6x20	Bolt M6x20
20	4	**STM7056**	Afdichtring	Seal washer
21	1	**STM9262**	Banjo oog	Banjo eye
22	1	**STM8057**	Banjo bout M12x1	Banjo bolt M12x1
23	1	**STM4591**	Slangpilaar M12x1-8mm	Hose pillar M12x1-8mm
24	4	**STM6185**	Klem	Clamp
25	1	**STM6581**	Brandstofslang 8mm l=440mm	Fuel hose 8mm l=440mm
26	1	**STM4593**	Klem	Clamp
27	1	**STM4592**	Steun	Support
28	1	**STM1056**	Veerring M8	Spring washer M8
29	1	**STM2005**	Moer M8	Nut M8
30	1	**STM3355**	Bout M8x20	Bolt M8x20
31	1	**STM4590**	Brandstofslang 8 mm l = 490 mm	Fuel hose 8 mm l = 490 mm
32	1	**STM4595**	Brandstofretour nippel	Fuel return nippel
33	2	**STM7056**	Afdichtring 12,5x20x1,5	Seal washer 12,5x20x1,5

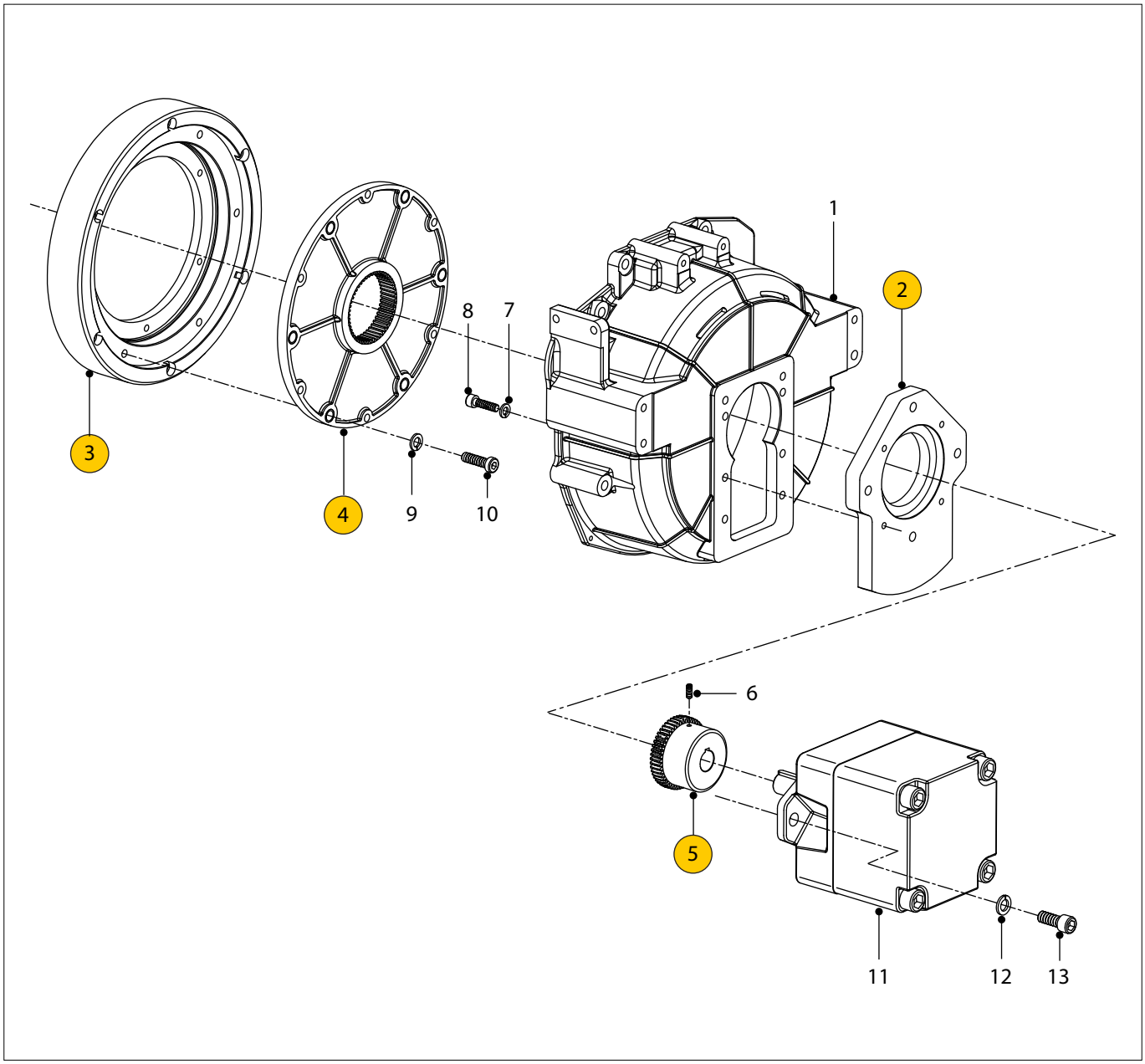

VH4.65 VH4.80 **Aanbouwdelen Powerpack** **Adaptor parts Powerpack**

pos.	qty	part	benaming	description
1	1	**STM4513**	Vliegwielhuis	Flywheel housing
2	1	**HT5150**	Flens t.b.v. powerpack	Flange
3	1	**STM4519**	Vliegwielverzwaring	Flywheel ring
4	1	**HT5147**	Flens	Flange
5	1	**HT5149**	Naaf	Hub
6	1	**B06166Y**	Stelschroef M6x16	Adj. screw M6x16
7	4	**R084Y**	Veerring M8	Spring washer M8
8	4	**B08307Y**	Inbusbout M8x30	Allen screw M8x30
9	6	**R104Y**	Veerring M10	Spring washer M10
10	6	**B010307YL**	Inbusbout (lage kop) M10x30	Allen screw (low head) M10x30
11	1	**HT5169**	Plunjerpomp	Piston pump
12	2	**R124Y**	Veerring M12	Spring washer M12
13	2	**B12307Y**	Inbusbout M12x30	Allen screw M12x30

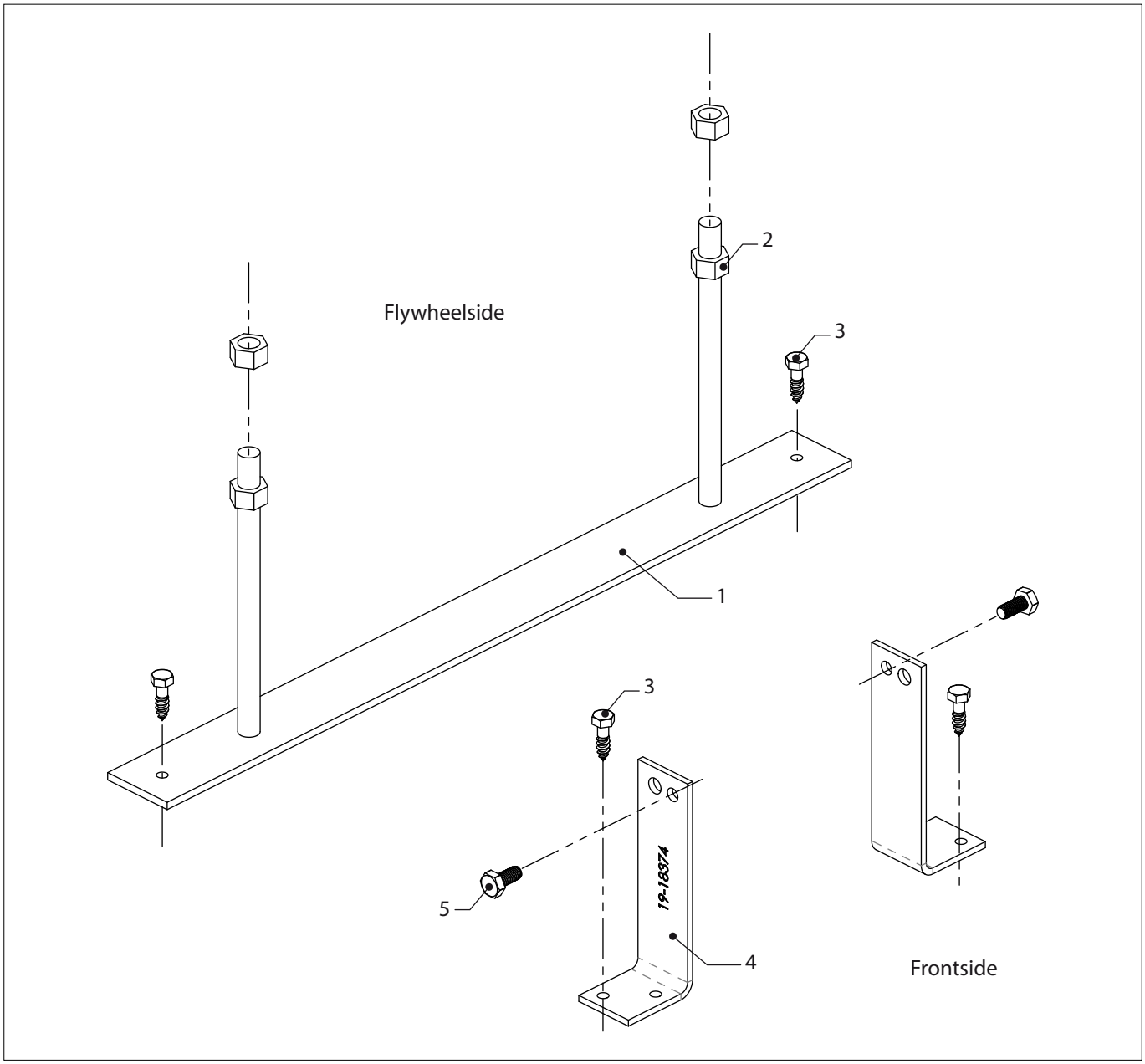

VH4.65 VH4.80 **Transportsteun** **Transport support**

pos.	qty	part	benaming	description
1	1	**08-01667**	Transportsteun	Transport support
2	4	**STM4010**	Moer M16	Nut M16
3	6	**19-17130**	Houdraaibout 8x30	Wood thread bolt 8x30
4	2	**19-18374**	Transportsteun	Transport support
5	2	**STM3705**	Bout M10x1,25x25	Bolt M10x1,25x25

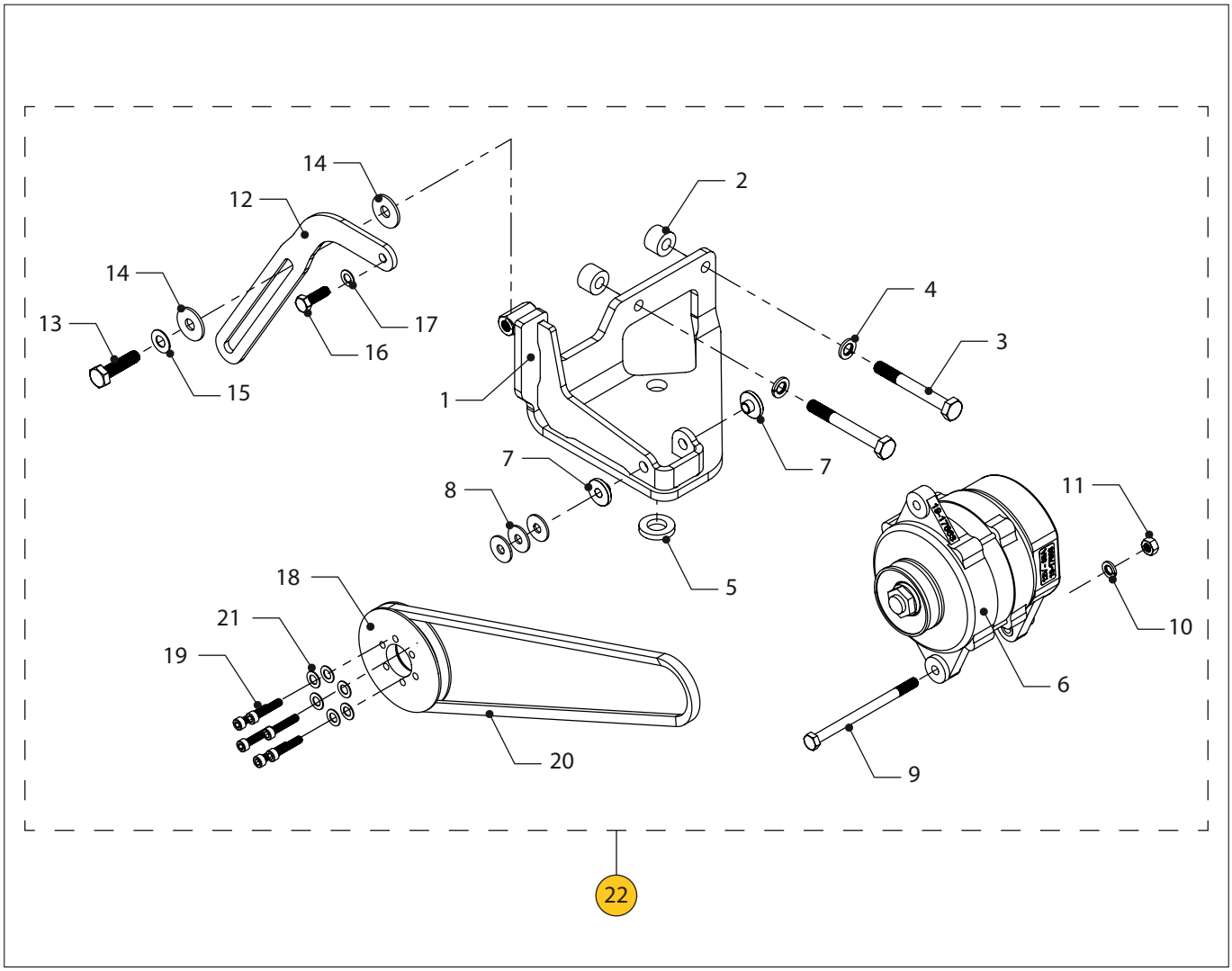

VH4.65 VH4.80 **Kit tweede dynamo 12V-85A** **Kit second alternator 12V-85A**

pos.	qty	part	benaming	description
1	1	**23-25856**	Motorsteun	Engine support assy
2	2	**23-25860**	Bus	Bush
3	2	**23-24447**	Zeskantbout M10x1.25x85	Hex bolt M10x1.25x85
4	2	**R104Y**	Veerring	Spring lock washer
5	1	**23-24376**	Afstandhouder d=5	Spacer d=5
6	1	**19-17663**	Dynamo 12V-85A	Alternator 12V-85A
7	2	**23-25921**	Bus	Bush
8	3	**R082Y**	Vlakke sluitring 3D	Plain washer 3D
9	1	**B081205Y**	Zeskantbout	Hex head bolt
10	1	**R084Y**	Veerring	Spring lock washer
11	1	**M08Y**	Zeskantmoer	Hexagon nut
12	1	**23-24344**	Spanner	Tensioner
13	1	**B10405YT**	Zeskantschroef	Hexagon head screw
14	2	**R102Y**	Vlakke sluitring 3D	Plain washer 3D
15	1	**R105Y**	Gegolfde veerring	Wave spring washer
16	1	**B08255YT**	Zeskantschroef	Hexagon head screw
17	1	**R085Y**	Gegolfde veerring	Wave spring washer
18	1	**23-24338**	Snaarschijf	Pulley
19	6	**B06307R**	Zeskantige inbusdop	Hex socket head cap
20	1	**STM7369**	V-snaar SPZ profiel	V-belt SPZ profile
21	6	**R065Y**	Gegolfde veerring M6	Wave spring washer M6
22	1	**23-24455**	Set tweede dynamo VH4 12V-85A	Kit second alternator VH4 12V-85A

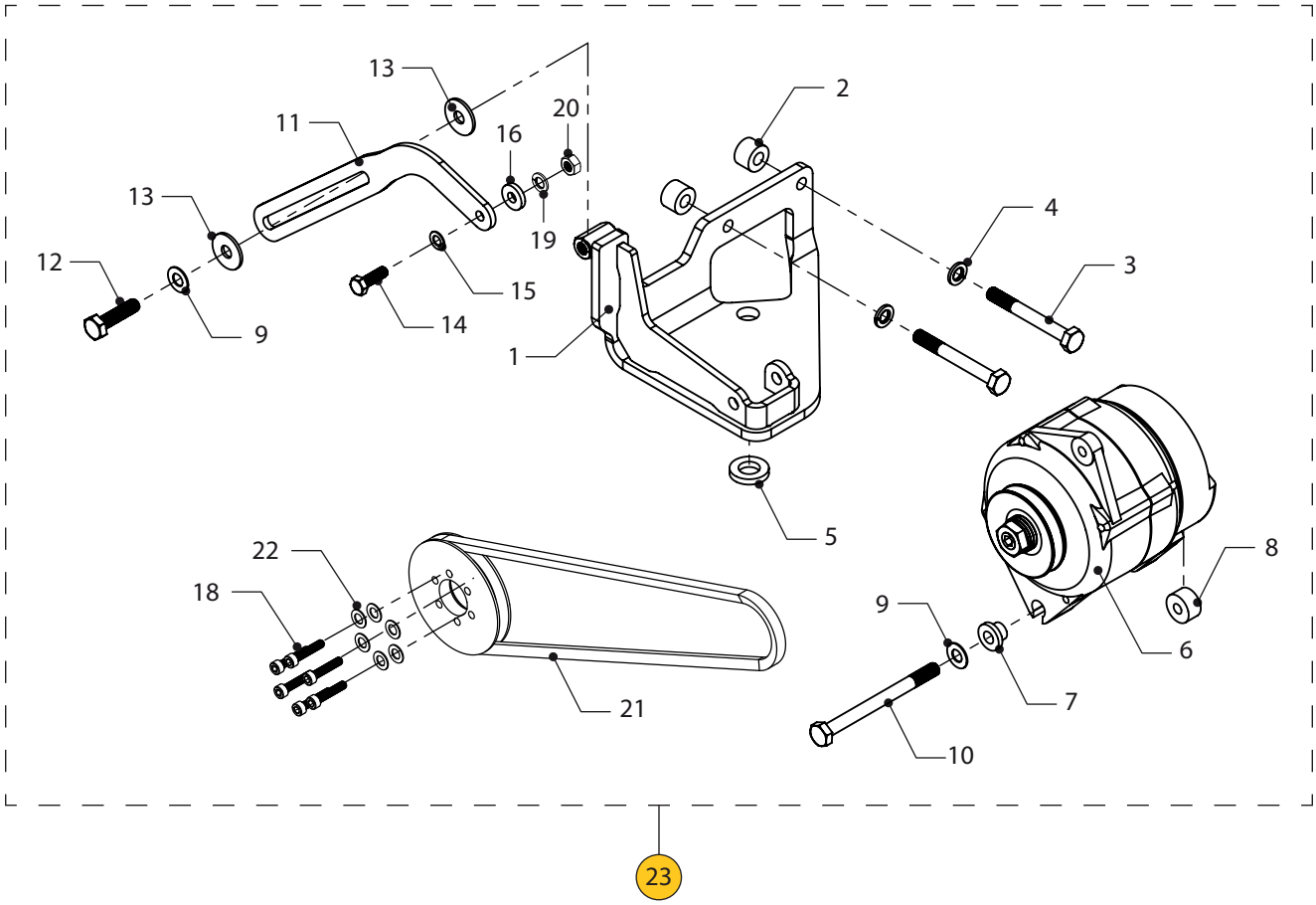

VH4.65 VH4.80 **Kit tweede dynamo 12V-110A** **Kit second alternator 12V-110A**

pos.	qty	part	benaming	description
1	1	**23-25856**	Motorsteun	Engine support assy
2	2	**23-25860**	Bus	Bush
3	2	**23-24447**	Zeskantbout M10x1.25x85	Hex bolt M10x1.25x85
4	2	**R104Y**	Veerring	Spring lock washer
5	1	**23-24376**	Afstandhouder d=5	Spacer d=5
6	1	**STM9292**	Dynamo 12V-110A	Alternator 12V-110A
7	1	**STM7641**	Kraagbus	Collar bushing
8	1	**23-25922**	Bus	Bush
9	2	**R105Y**	Gegolfde veerring	Wave spring washer
10	1	**B101205Y**	Zeskantbout	Hex head bolt
11	1	**23-24344**	Spanner	Tensioner
12	1	**B10405YT**	Zeskantschroef	Hexagon head screw
13	2	**R102Y**	Vlakke sluitring 3D	Plain washer 3D
14	1	**B08255YT**	Zeskantschroef	Hexagon head screw
15	1	**R085Y**	Gegolfde veerring	Wave spring washer
16	1	**CT30059**	Ring Ø8,4x21x4	Washer Ø8,4x21x4
17	1	**23-24338**	Snaarschijf	Pulley
18	6	**B06307Y**	Zeskantige inbusdop M6 x 30	Hex socket head cap M6 x 30
19	1	**STM1056**	Veerring M8	Spring washer M8
20	1	**STM2005**	Zeskantmoer M8	Hex nut M8
21	1	**STM7966**	V-snaar M4	V-belt M4
22	6	**R065Y**	Gegolfde veerring M6	Wave spring washer M6
23	1	**23-25855**	Kit second alternator VH4 12V-110A	Set tweede dynamo VH4 12V-110A

Register
Index

art.nr. / part	pag. page	pos.
08-01108	3-2	8
08-01108	3-13	8
08-01351	4-6	2
08-01351	4-8	2
08-01420	4-2	27
08-01667	10-2	1
18-14649	3-2	10
18-14649	3-4	2
18-14649	3-13	10
18-14649	3-16	2
18-14649	3-16	10
18-14715	3-2	11
18-14715	3-4	3
18-14715	3-13	11
18-14715	3-16	3
19-17130	10-2	3
19-17663	10-3	6
19-18374	10-2	4
23-24338	10-3	18
23-24338	10-4	17
23-24344	10-3	12
23-24344	10-4	11
23-24376	10-3	5
23-24376	10-4	5
23-24447	10-3	3
23-24447	10-4	3
23-24455	10-3	22
23-25855	10-4	23
23-25856	10-3	1
23-25856	10-4	1
23-25860	10-3	2
23-25860	10-4	2
23-25921	10-3	7
23-25922	10-4	8
B010307YL	10-1	10
B06166Y	10-1	6
B06307R	10-3	19
B06307Y	10-4	18
B081205Y	10-3	9
B08255YT	10-3	16
B08255YT	10-4	14
B08307Y	10-1	8
B101205Y	10-4	10
B10405YT	10-3	13
B10405YT	10-4	12
B12307Y	10-1	13

art.nr. / part	pag. page	pos.
CT30059	3-2	17
CT30059	3-5	20
CT30059	3-14	17
CT30059	3-17	20
CT30059	10-4	16
CT40075	4-1	8
CT40083	4-10	26
CT50079	5-4	7
DM10004	2-9	7
DM10004	2-9	8
DM10004	2-10	9
DM10004	2-10	10
EXPT1,54	3-4	10
FUHOSE13	3-2	12
FUHOSE13	3-13	12
HCHD073	3-6	7
HCHD073	3-19	7
HCS08	3-4	8
HCS08	3-16	8
HCS16	3-12	22
HCS25	3-7	17
HCS60	3-18	11
HCS75	5-4	2
HT5147	10-1	4
HT5149	10-1	5
HT5150	10-1	2
HT5169	10-1	11
HY100	2-18	9
HY100	5-2	25
M08Y	10-3	11
MP35374	4-7	13
MP35374	4-9	15
MPA22....	4-7	18
MPA22....	4-7	18
MPA22....	4-7	18
MPA22....	4-7	18
MPA22....	4-7	18
MPA34....	4-10	22
MPA34....	4-10	22
MPA34....	4-10	22
MPA34....	4-10	22
MPA34....	4-10	22
MPKA02	4-2	28
MPKA04	4-2	28
MPKA06	4-2	28
MPKA12	4-2	28

art.nr. / part	pag. page	pos.
MPKB02	4-2	29
MPKB04	4-2	29
MPKB06	4-2	29
MPKB12	4-2	29
MPKC02	4-2	30
MPKC04	4-2	30
MPKC06	4-2	30
MPKC12	4-2	30
MPVB2	4-10	27
OILB	4-9	11
OILB	4-9	11
OILN	4-9	11
OILN	4-9	11
P2295RKP	4-6	3
P2295RKP	4-8	3
P35134RKP	4-6	11
P35134RKP	4-9	13
P35254ZKP	4-7	15
P35254ZKP	4-9	17
PA6488	4-6	10
PA6488	4-9	12
R065Y	10-3	21
R065Y	10-4	22
R082Y	10-3	8
R084Y	10-1	7
R084Y	10-3	10
R085Y	10-3	17
R085Y	10-4	15
R102Y	10-3	14
R102Y	10-4	13
R104Y	10-1	9
R104Y	10-3	4
R104Y	10-4	4
R105Y	10-3	15
R105Y	10-4	9
R124Y	10-1	12
SET0190	4-7	20
SET0190	4-10	20
SET0191	4-7	20
SET0191	4-10	20
SET40131	4-7	19
SET40131	4-9	18
SET40132	4-7	19
SET40132	4-9	18
STM1006	3-2	9
STM1006	3-13	9

art.nr. / part	pag. page	pos.
STM1017	3-16	11
STM1019	3-7	2
STM1019	3-7	9
STM1019	3-11	4
STM1019	3-12	19
STM1019	3-19	19
STM1019	4-3	5
STM1019	4-3	12
STM1019	4-4	13
STM1019	5-1	3
STM1019	5-2	16
STM1019	5-2	21
STM1019	5-2	26
STM1019	5-4	3
STM1024	5-2	20
STM1025	3-6	5
STM1025	3-19	5
STM1025	4-4	2
STM1025	5-2	19
STM1025	6-4	18
STM1029	3-6	6
STM1029	3-19	6
STM1029	4-4	4
STM1030	4-4	3
STM1030	6-4	19
STM1054	5-3	30
STM1056	3-2	19
STM1056	3-4	6
STM1056	3-5	22
STM1056	3-11	12
STM1056	3-14	19
STM1056	3-15	47
STM1056	3-16	6
STM1056	3-17	22
STM1056	3-17	37
STM1056	3-18	3
STM1056	4-1	2
STM1056	4-2	25
STM1056	4-3	8
STM1056	6-4	28
STM1056	10-4	19
STM1059	3-2	14
STM1059	3-5	19
STM1059	3-11	9
STM1059	3-13	14
STM1059	3-16	19

art.nr. / part	pag. page	pos.	art.nr. / part	pag. page	pos.	art.nr. / part	pag. page	pos.	art.nr. / part	pag. page	pos.
STM1062	3-2	13	STM3005	3-4	14	STM4055	3-15	46	STM4526	5-2	14
STM1062	3-4	18	STM3005	3-6	9	STM4055	3-17	36	STM4526	5-4	4
STM1062	3-11	6	STM3005	3-7	14	STM4056	5-1	10	STM4527	5-2	22
STM1062	3-13	13	STM3005	3-10	7	STM4061	2-18	2	STM4528	5-1	7
STM1062	3-16	18	STM3005	3-11	15	STM4061	2-18	5	STM4528	5-1	8
STM1062	4-1	19	STM3005	3-14	25	STM4061	5-1	5	STM4530	3-12	17
STM1606	3-7	11	STM3005	3-14	28	STM4061	5-2	28	STM4530	3-19	17
STM1610	3-3	20	STM3005	3-16	14	STM4061	6-3	5	STM4531	3-12	21
STM1610	3-5	23	STM3005	3-19	9	STM4062	6-3	6	STM4534	3-12	24
STM1610	3-11	3	STM3005	5-4	9	STM4503	3-3	23	STM4536	3-3	38
STM1610	3-11	13	STM3071	3-10	9	STM4503	3-14	23	STM4536	3-15	38
STM1610	3-14	20	STM3355	3-18	4	STM4504	3-2	2	STM4537	5-4	12
STM1610	3-17	23	STM3355	4-1	3	STM4504	3-13	2	STM4540	3-11	1
STM1610	3-19	20	STM3355	4-2	26	STM4505	3-2	3	STM4540	4-10	23
STM1610	5-1	4	STM3355	4-4	14	STM4505	3-13	3	STM4541	2-1	11
STM1653	3-11	11	STM3355	6-4	30	STM4506	3-2	1	STM4541	3-11	2
STM1703	4-4	5	STM3491	5-4	6	STM4506	3-13	1	STM4544	3-5	27
STM1703	4-5	24	STM3491	5-4	8	STM4507	4-3	2	STM4544	3-17	27
STM1704	4-5	25	STM3690	1-1	1	STM4508	4-3	7	STM4545	3-4	1
STM1705	4-4	8	STM3690	6-3	4	STM4509	1-1	6	STM4545	3-16	1
STM1705	4-4	9	STM3705	10-2	5	STM4509	4-3	14	STM4546	3-4	17
STM1705	4-5	27	STM3742	3-4	7	STM4510	5-2	13	STM4550	4-4	10
STM1707	4-4	7	STM3742	3-16	7	STM4511	5-1	1	STM4551	4-4	1
STM1707	4-4	11	STM3749	3-7	4	STM4512	5-1	1	STM4559	3-4	4
STM1707	4-5	26	STM3749	4-3	10	STM4513	10-1	1	STM4559	3-10	4
STM1806	4-5	21	STM3771	3-4	13	STM4514	5-1	1	STM4559	3-16	4
STM1807	4-5	17	STM3771	3-16	13	STM4515	5-2	18	STM4560	3-10	1
STM1807	4-5	23	STM3771	5-4	5	STM4516	3-2	16	STM4565	4-3	18
STM1808	4-5	22	STM3796	6-3	3	STM4516	3-5	25	STM4575	3-10	1
STM1851	4-5	20	STM3797	6-3	2	STM4516	3-13	16	STM4580	4-3	18
STM1902	4-4	16	STM4010	10-2	2	STM4517	3-3	22	STM4583	3-15	43
STM1907	4-4	6	STM4011	2-18	7	STM4517	3-7	3	STM4583	3-17	33
STM2005	3-7	10	STM4011	5-2	23	STM4517	3-14	22	STM4584	3-15	44
STM2005	4-2	32	STM4013	5-1	4	STM4518	3-2	18	STM4584	3-17	34
STM2005	4-3	13	STM4014	3-6	2	STM4518	3-5	21	STM4585	3-12	25
STM2005	6-4	29	STM4014	3-19	2	STM4518	3-14	18	STM4585	3-15	45
STM2005	10-4	20	STM4014	4-1	13	STM4518	3-17	21	STM4585	3-17	35
STM2006	3-10	3	STM4014	6-3	9	STM4519	10-1	3	STM4586	3-15	42
STM2006	4-1	20	STM4014	6-3	12	STM4520	3-7	1	STM4586	3-17	32
STM2012	3-3	33	STM4016	5-1	4	STM4521	3-7	8	STM4588	6-3	11
STM2012	3-3	39	STM4018	4-1	14	STM4522	3-7	13	STM4590	6-4	31
STM2012	3-15	48	STM4018	6-3	10	STM4522	3-8	19	STM4591	6-4	23
STM2012	3-17	38	STM4037	6-3	17	STM4522B	3-9	1	STM4592	6-4	27
STM2019	3-10	2	STM4038	6-3	15	STM4523	1-1	7	STM4593	6-4	26
STM2019	4-2	21	STM4043	3-5	26	STM4523	3-7	16	STM4595	6-4	32
STM2261	5-2	27	STM4043	3-17	26	STM4524	3-11	10	STM4610	4-1	4
STM3005	3-3	25	STM4049	6-3	14	STM4525	4-3	3	STM4611	4-1	9
STM3005	3-3	28	STM4050	6-3	16	STM4526	3-17	25	STM4612	4-1	1

art.nr. / part	pag. page	pos.	art.nr. / part	pag. page	pos.	art.nr. / part	pag. page	pos.	art.nr. / part	pag. page	pos.
STM4616	4-1	12	STM4671	3-7	18	STM4727	2-4	26	STM4767	2-8	2
STM4616	6-3	8	STM4672	3-7	19	STM4728	2-1	17	STM4768	2-8	3
STM4620	3-3	32	STM4674	3-7	20	STM4728	2-4	27	STM4769	2-8	4
STM4620	3-14	32	STM4675	3-7	21	STM4729	2-4	28	STM4770	2-8	5
STM4621	3-3	26	STM4677	3-16	17	STM4730	2-2	19	STM4771	2-8	6
STM4621	3-11	14	STM4677	3-19	10	STM4730	2-2	20	STM4772	2-8	7
STM4621	3-14	26	STM4681	2-18	1	STM4731	2-4	30	STM4773	2-8	8
STM4622	3-3	27	STM4682	2-18	4	STM4732	2-4	31	STM4774	2-8	9
STM4622	3-12	16	STM4683	2-18	6	STM4733	2-2	21	STM4775	2-8	10
STM4622	3-14	27	STM4684	2-18	3	STM4733	2-4	32	STM4776	2-8	11
STM4623	3-3	40	STM4685	3-4	5	STM4734	2-4	33,34	STM4777	2-8	12
STM4624	3-3	34	STM4685	3-16	5	STM4735	2-5	34	STM4778	2-8	13
STM4624	3-12	23	STM4687	5-1	6	STM4736	2-5	35	STM4779	2-8	14
STM4625	3-3	30	STM4687	5-2	29	STM4737	2-5	36	STM4780	2-8	15
STM4625	3-10	8	STM4688	3-18	10	STM4738	2-6	1	STM4781	2-8	16
STM4625	3-14	30	STM4689	3-18	1	STM4739	2-6	2	STM4782	2-1	9
STM4626	3-6	10	STM4690	3-18	2	STM4740	2-2	23	STM4782	2-8	17
STM4626	3-7	15	STM4691	3-18	12	STM4740	2-6	3	STM4783	2-1	10
STM4627	3-3	29	STM4700	2-5	37	STM4741	2-6	4	STM4783	2-8	18
STM4627	3-6	11	STM4701	2-5	38	STM4742	2-6	5	STM4784	2-8	19
STM4627	3-14	29	STM4702	2-3	1	STM4743	2-6	6	STM4785	2-9	1
STM4630	3-3	41	STM4703	2-3	2	STM4744	2-6	7	STM4786	2-9	2
STM4630	3-4	15	STM4704	2-3	3	STM4745	2-6	8	STM4787	2-9	3
STM4630	3-15	41	STM4705	2-3	4	STM4746	2-6	9	STM4788	2-9	4
STM4630	3-16	15	STM4706	2-3	5	STM4747	2-6	10	STM4789	2-9	5
STM4630	3-19	12	STM4707	2-3	6	STM4748	2-6	11	STM4790	2-9	6
STM4630	5-4	10	STM4708	2-3	7	STM4748	2-12	7	STM4792	2-9	7
STM4631	5-4	11	STM4709	2-3	8	STM4749	2-6	12	STM4793	2-9	7
STM4633	3-6	1	STM4710	2-3	9	STM4750	2-6	13	STM4794	2-9	7
STM4633	3-19	1	STM4711	2-3	10	STM4751	2-6	14	STM4795	2-9	7
STM4634	3-6	4	STM4712	2-3	11	STM4752	2-1	14	STM4797	2-9	8
STM4634	3-19	4	STM4713	2-3	12	STM4752	2-6	15	STM4798	2-9	8
STM4641	2-18	8	STM4714	2-3	13	STM4753	2-2	24	STM4799	2-9	8
STM4641	2-18	10	STM4715	2-3	14	STM4753	2-6	16	STM4800	2-9	8
STM4641	5-2	24	STM4715	5-1	2	STM4754	2-6	17	STM4802	2-10	9
STM4641	5-3	35	STM4716	2-3	15	STM4755	2-6	18	STM4803	2-10	9
STM4651	3-8	1	STM4717	2-3	16	STM4756	2-7	19	STM4804	2-10	9
STM4654	3-8	4	STM4718	2-4	17	STM4757	2-7	20	STM4805	2-10	9
STM4655	3-8	5	STM4719	2-4	18	STM4758	2-7	21	STM4807	2-10	10
STM4660	3-8	10	STM4720	2-4	19	STM4759	2-2	26	STM4808	2-10	10
STM4661	3-8	11	STM4721	2-4	20	STM4759	2-7	22	STM4809	2-10	10
STM4663	3-8	13	STM4722	2-1	16	STM4760	2-7	23	STM4810	2-10	10
STM4664	3-8	14	STM4722	2-4	21	STM4761	2-7	24	STM4811	2-11	1
STM4665	3-8	15	STM4723	2-1	15	STM4762	2-7	25	STM4831	2-11	2
STM4666	3-8	16	STM4723	2-4	22	STM4763	2-7	26	STM4832	2-11	3
STM4667	3-8	17	STM4724	2-4	23	STM4764	2-7	27	STM4835	2-11	4
STM4668	3-8	18	STM4725	2-4	24	STM4765	2-7	28	STM4836	2-11	5
STM4669	3-8	20	STM4726	2-4	25	STM4766	2-8	1	STM4837	2-11	6

art.nr. / part	pag. page	pos.	art.nr. / part	pag. page	pos.	art.nr. / part	pag. page	pos.	art.nr. / part	pag. page	pos.
STM4838	2-11	7	STM4886	2-14	27	STM4929	2-17	28	STM4973	4-2	31
STM4839	2-11	8	STM4887	2-14	28	STM4930	2-17	29	STM4974	4-3	19
STM4840	2-11	9	STM4888	2-14	29	STM4931	2-17	30	STM4975	5-3	31
STM4841	2-11	10	STM4889	2-14	30	STM4932	2-1	3	STM4976	3-12	18
STM4842	2-12	1	STM4890	2-14	31	STM4932	2-17	31	STM4976	3-19	18
STM4843	2-12	2	STM4891	2-14	32	STM4933	2-17	32	STM4977	5-3	32
STM4844	2-12	3	STM4892	2-15	33	STM4934	3-1	1	STM4978	5-3	33
STM4845	2-12	4	STM4893	2-15	34	STM4935	2-1	18	STM4979	5-3	34
STM4846	2-12	5	STM4894	2-15	35	STM4935	3-1	2	STM4980	2-1	4
STM4847	2-12	6	STM4895	2-15	36	STM4936	3-1	3	STM4980	3-3	24
STM4849	2-12	8	STM4896	2-15	37	STM4936	3-12	26	STM4980	3-14	24
STM4850	2-12	9	STM4897	2-15	38	STM4936	3-19	21	STM4981	2-1	1
STM4851	2-12	10	STM4898	2-15	39	STM4939	3-1	5	STM4982	2-1	2
STM4852	2-12	11	STM4899	2-15	40	STM4940	6-1	1	STM4983	2-2	28
STM4853	2-12	12	STM4900	2-15	41	STM4941	6-1	2	STM4984	2-2	22
STM4854	2-12	13	STM4901	2-15	42	STM4942	6-1	3	STM4984	2-7	29
STM4855	2-12	14	STM4902	2-15	43	STM4943	6-1	4	STM4985	4-1	18
STM4856	2-12	15	STM4903	2-16	1	STM4944	6-1	5	STM4987	5-1	12
STM4857	2-12	16	STM4904	2-16	2	STM4945	6-1	6	STM4988	3-6	13
STM4858	2-12	17	STM4905	2-16	4	STM4946	6-1	7	STM4988	3-19	13
STM4859	2-12	18	STM4906	2-16	5	STM4947	6-1	8	STM4989	3-6	14
STM4860	2-13	1	STM4907	2-16	6	STM4948	6-1	9	STM4989	3-19	14
STM4861	2-13	2	STM4907	4-10	25	STM4949	6-1	10	STM4990	3-6	15
STM4862	2-13	3	STM4908	2-16	7	STM4950	6-1	11	STM4990	3-19	15
STM4863	2-13	4	STM4909	2-1	12	STM4951	2-1	7	STM4991	3-6	16
STM4864	2-13	5	STM4909	2-16	8	STM4951	6-1	12	STM4991	3-19	16
STM4865	2-13	6	STM4910	1-1	2	STM4952	2-1	8	STM4995	3-4	16
STM4866	2-13	7	STM4910	2-16	9	STM4952	6-1	13	STM4995	3-6	8
STM4867	2-13	8	STM4912	2-2	27	STM4953	6-1	14	STM4995	3-16	16
STM4868	2-13	9	STM4912	2-16	11	STM4954	6-1	15	STM4995	3-19	8
STM4869	2-13	10	STM4913	2-16	12	STM4955	6-1	16	STM6049	6-3	1
STM4870	2-13	11	STM4914	2-16	13	STM4956	6-1	17	STM6113	3-2	4
STM4871	2-13	12	STM4915	2-16	14	STM4957	6-1	18	STM6113	3-13	4
STM4872	2-13	13	STM4916	2-16	15	STM4958	6-1	19	STM6121	3-7	5
STM4873	2-13	14	STM4917	2-16	16	STM4959	6-1	20	STM6126	3-10	5
STM4874	2-13	15	STM4918	2-16	17	STM4960	6-1	21	STM6130	3-2	7
STM4875	2-13	16	STM4919	2-17	18	STM4961	6-1	22	STM6130	3-13	7
STM4876	2-14	17	STM4920	2-17	19	STM4962	6-1	23	STM6159	4-1	11
STM4877	2-14	18	STM4921	2-17	20	STM4963	6-2	1	STM6164	3-8	3
STM4878	2-14	19	STM4922	2-2	25	STM4964	6-2	2	STM6185	6-4	24
STM4879	2-14	20	STM4922	2-17	21	STM4965	6-2	3	STM6267	2-16	10
STM4880	2-14	21	STM4923	2-17	22	STM4966	6-2	4	STM6267	4-2	22
STM4881	2-14	22	STM4924	2-17	23	STM4967	6-2	5	STM6299	3-10	6
STM4882	2-14	23	STM4925	2-17	24	STM4968	6-2	6	STM6305	4-2	24
STM4883	2-14	24	STM4926	2-17	25	STM4969	6-2	7	STM6503	3-2	6
STM4884	2-14	25	STM4927	2-17	26	STM4970	6-2	8	STM6503	3-13	6
STM4885	2-14	26	STM4928	2-17	27	STM4971	6-2	9	STM6531	3-3	21
STM4886	2-1	6	STM4929	2-1	5	STM4972	4-1	15	STM6531	3-5	28

art.nr. / part	pag. page	pos.
STM6531	3-14	21
STM6531	3-17	28
STM6533	4-4	15
STM6539	5-2	17
STM6561	4-3	11
STM6568	4-5	19
STM6571	4-8	1
STM6581	6-4	25
STM6588	3-8	7
STM6590	3-8	8
STM6591	3-8	9
STM6592	3-8	12
STM6911	4-10	28
STM6982	4-7	14
STM7003	3-7	12
STM7056	6-4	20
STM7056	6-4	33
STM7369	10-3	20
STM7446	3-2	5
STM7446	3-13	5
STM7568	5-4	1
STM7584	5-1	9
STM7591	4-1	10
STM7595	5-1	11
STM7641	10-4	7
STM7673	3-17	29
STM7966	10-4	21
STM8002	1-1	5
STM8057	6-4	22
STM8074	1-1	4
STM8074	3-8	2
STM8074	3-9	2
STM8082	4-3	16
STM8126	3-7	6
STM8126	4-3	9
STM8129	4-5	18
STM8148	3-18	5
STM8169	3-17	31
STM8322	3-11	7
STM8322	4-1	16
STM8331	4-3	6
STM8508	5-2	15
STM8517	3-18	7
STM8518	3-18	8
STM8522	5-2	15
STM8603	3-8	6
STM8660	4-3	1
STM8801	3-18	6

art.nr. / part	pag. page	pos.
STM8829	3-12	20
STM8829	4-3	4
STM9003	6-3	7
STM9024	3-2	15
STM9024	3-5	24
STM9024	3-13	15
STM9024	3-17	24
STM9043	4-1	7
STM9050	4-1	5
STM9050	4-1	6
STM9060	3-6	3
STM9060	3-19	3
STM9060	6-3	13
STM9063	4-4	12
STM9080	4-3	15
STM9169	4-6	4
STM9169	4-8	4
STM9170	4-6	5
STM9170	4-8	5
STM9171	4-6	6
STM9171	4-8	6
STM9172	4-6	7
STM9172	4-8	7
STM9181	4-9	16
STM9186	4-6	1
STM9188	4-7	17
STM9188	4-9	14
STM9210	4-6	4
STM9210	4-8	4
STM9214	4-7	16
STM9214	4-9	19
STM9215	4-6	12
STM9215	4-10	21
STM9256	3-11	5
STM9262	6-4	21
STM9292	10-4	6
STM9502	3-4	12
STM9503	3-4	11
STM9503	3-18	9
STM9504	3-4	9
STM9504	3-16	9
STM9570	1-1	8
STM9744	3-3	35
STM9744	3-7	7
STM9744	3-14	35
TACHB4000	4-6	8
TACHB4000	4-8	8
TACHB5000	4-6	8

art.nr. / part	pag. page	pos.
TACHB5000	4-8	8
TACHN4000	4-6	8
TACHN4000	4-8	8
TEMPB	4-8	10
TEMPB	4-9	10
TEMPN	4-9	10
TEMPN	4-9	10
TEMPSR120	4-10	24
VLT12B	4-6	9
VLT12B	4-8	9
VLT12N	4-6	9
VLT12N	4-8	9
VLT24B	4-6	9
VLT24B	4-8	9
VLT24N	4-6	9
VLT24N	4-8	9
VP000193	3-9	3
VP000198	3-9	4
VP000380	3-1	4

Havenstraat 11 - 3115 HC Schiedam - The Netherlands
Tel.: +31 (0)88 4884700 - sales@vetus.com - www.vetus.com

3511321.06 2026-10 Printed in the Netherlands